PE1102N

Rugged Edge AI system with NVIDIA® JetsonTM OrinTM NX/Nano, supports up to four GMSL2 cameras, **designed for demanding AI applications such as autonomous vehicles, robotics, industrial automation, and video surveillance.**

Features

- Intelligent Edge AI System with NVIDIA Jetson™ Orin™ NX, Orin™ Nano
- Fanless design and diverse I/O in a compact size
- Ready to connect to Wi-Fi, Bluetooth and 4G/5G via optional modules
- Wide-range DC input with built-in ignition power control
- Withstand harsh environment and tested by MIL-STD-810H
- Wide operating-temperature range, from -20 to 60 °C

Specifications

Processor System	SOM	Jetson Orin Nano 4G	Jetson Orin Nano 8G	Jetson Orin NX 8G	Jetson Orin NX 16G
	CPU	6 x Arm® Cortex®-A78AE v8.2			8 x Arm® Cortex®-A78AE v8.2
	GPU	512-core NVIDIA Ampere GPU with 16 Tensor Cores	1024-core NVIDIA Ampere GPU with 32 Tensor Cores		
	Memory	4 GB 64-bit LPDDR5	8 GB 128-bit LPDDR5	8 GB 128-bit LPDDR5	16 GB 128-bit LPDDR5
Wired Interface	Ethernet	2 x 10/100/1000 Mbps, RJ45			
	USB (or Header)	3 x USB 3.2 Gen1, Type-A 1 x USB 2.0, Micro-USB for OS Flash 2 x USB 2.0, Pin Header (Internal)			
	DB25	2 x RS-232/422/485, DB9 and 1 x CAN bus, DB9			
	DIO	4 x DI, 4 x DO (2x5 Terminal Block, w/ isolation)			
	Display	1 x HDMI 1.4a, 3840 x 2160 @30Hz		1 x HDMI 2.0b, 3840 x 2160 @60Hz	
	Debug Port	1 x Debug console via Micro-USB			
Wireless Interface	Wi-Fi	Optional			
	Bluetooth	Optional			
	Cellular	Optional			
	GPS	Optional			
Expansion	M.2 M key	1 x 2242/2260/2280, for M.2 SSD (PCIe, OS disk, size option)			
	M.2 E key	1 x 2230, for Wi-Fi/BT (PCIe, USB 2.0, I2C and PCM)			
	M.2 B key	1 x 3042/3052, for 4G/5G (PCIe, USB 2.0/3.0)			
	ASUS Expansion Module	1x AEM (LAN or GMSL or OOB)			
Slot	SIM	2 x nano-SIM slots			
Power	Power Input	12 to 36 VDC, 3-pin terminal block (built-in ignition power control)			
Mechanical	Mounting	Wall-mount (support assembly with DIN rail clips)			
	Dimensions	Board: 3.5", 146 x 105 mm System: 152 x 114 x 72 mm			
	Weight	1.6 KG			
Environment	Operating Temp.	-20 ~ up to 50°C			
	Storage Temp.	-40 ~ 85°C			
	Relative Humidity	10 ~ 95% (non-condensing)			
Security	TPM	on-board TPM v2.0			
Others	Watch Dog Timer	Yes. HW WDT			
	Operating System[1]	Ubuntu Desktop			

The specifications and price are subject to change without prior notice 2018 ASUSTek Computer Inc. All rights reserved.

Product Appearance and Outline

Front View

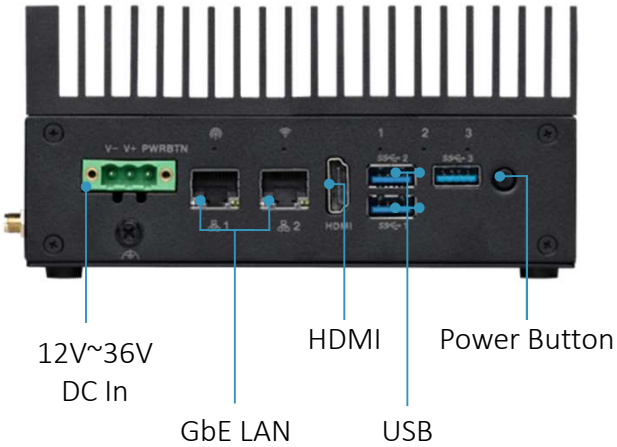

Back View

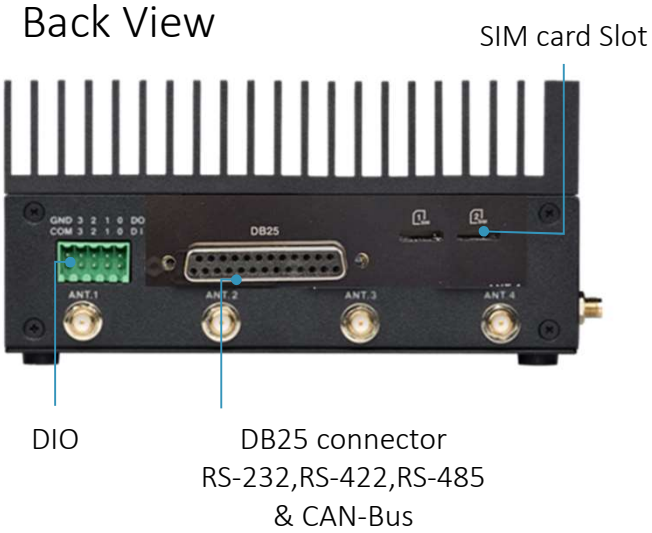

Isometric View

The specifications and price are subject to change without prior notice 2018 ASUSTek Computer Inc. All rights reserved.

SPECIFICATION

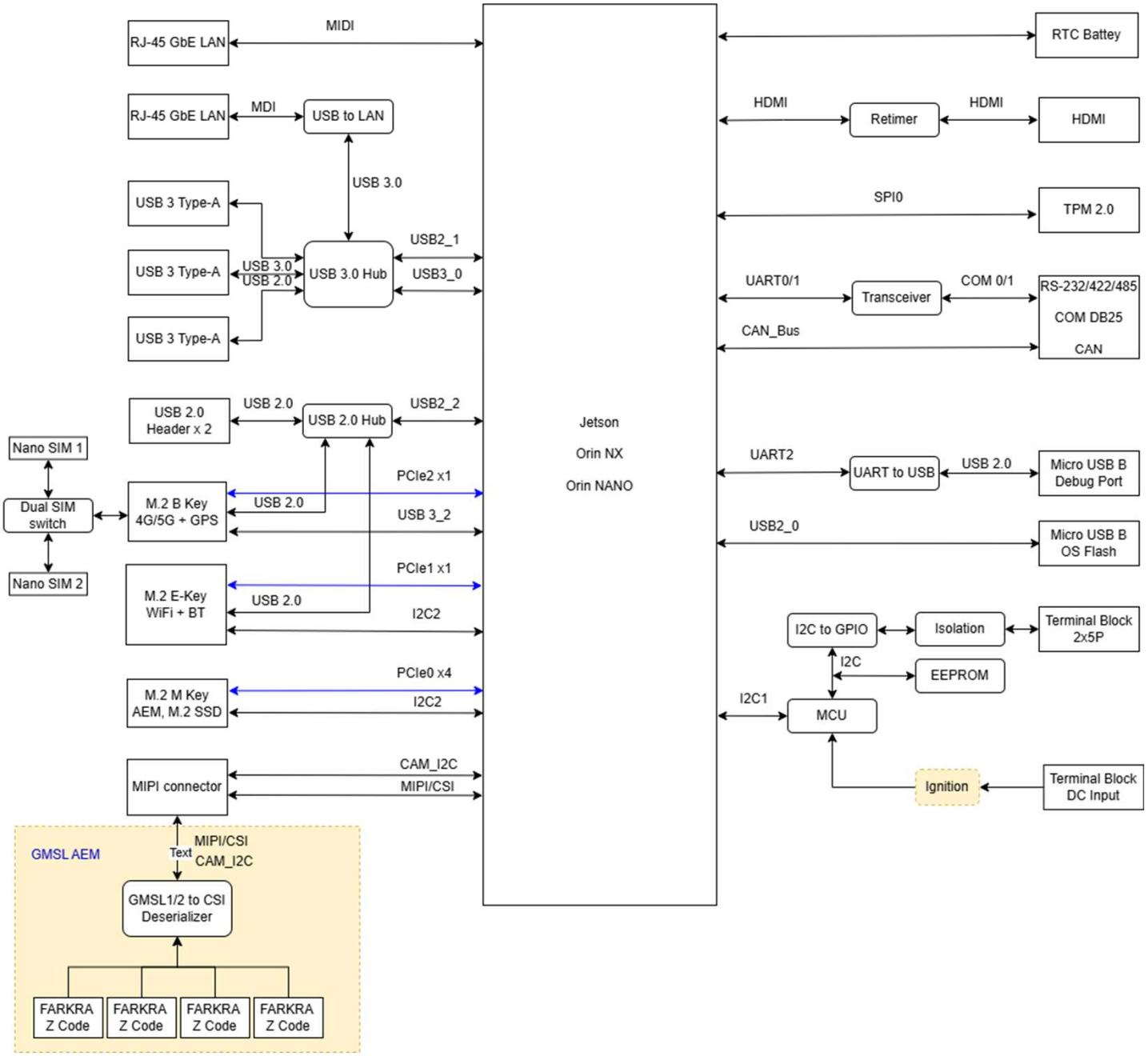

The specifications and price are subject to change without prior notice 2018 ASUSTek Computer Inc. All rights reserved.

Ordering Information

PN	SoM	DRAM	Wi-Fi/BT* (M.2 E-Key)	SSD* (M.2 M-Key)	4G/5G* (M.2 B-Key)	O.P. Temperature	PSU*	OS*
90AE02I0-M*	Jetson Orin NX	16 GB	option	option	option	-20~50	option	option
90AE02I0-M*	Jetson Orin NX	8 GB	option	option	option	-20~50	option	option
90AE02I0-M*	Jetson Orin Nano	8 GB	option	option	option	-20~50	option	option
90AE0210-M*	Jetson Orin Nano	4 GB	option	option	option	-20~50	option	option

* Optional and part number might vary for different regulations and package. Please consult the local sales representative for the exact 90PN.

Packing List

Description	Qty
Adapter cable DC to terminal block 3 pin	1
Wall mount bracket set	1
DIO terminal block	1
Dust cover set	1

Optional Accessories: (purchased separately)

Item#	Description
Wi-Fi/BT Module	
0C011-00214100	M.2 2230 802.11 a/b/g/n/ac + BT 5.0 (-40 to 85)
4G Module	
0C031-00052500	M.2 3042 EM05-G LTE Cat.4 module (for Global) (-40 to 85)
5G Module	
0C032-00020100	M.2 3052 RM520N-GL 5G NR module (for Global) (-40 to 85)
Wi-Fi/BT ANTENNA	
14008-04490000	Omni-directional rubber duck Wi-Fi antenna, 2.4/5/6GHz, 3.83dBi
4G/5G ANTENNA	
14008-05640000	Omni-directional rubber duck LTE/NR antenna, 617-960,1410-1610,1710-2690,3300-7125MHz, 4dBi
SSD	
03B03-00236400	SSD P3X4 128GB M2 2280 NVME
03B03-00422100	SSD P3X4 256GB M2 2280 NVME
03B03-00378200	SSD P3X4 512GB M2 2280 NVME

* The part number might vary due to part number revision.

The specifications and price are subject to change without prior notice 2018 ASUSTek Computer Inc. All rights reserved.

Optional Accessories: (purchased separately)

Item#	Description
ADAPTER	
0A001-01050900	65W Power adapter, input 100 - 240Vac, output 12Vdc / 5.41A, C14, 0 to 40°C O.P. temperature
0A001-00891600	65W Power adapter, input 100 - 240Vac, output 19Vdc / 3.42A, C6, 0 to 35°C O.P. temperature
POWER CORD	
14009-00021400	C14 Power cord with United States (US) plug, 180cm
14009-00021000	C14 Power cord with Europe (EU) plug, 180cm
14009-00021100	C14 Power cord with China (CN) plug, 180cm
14009-00020600	C14 Power cord with Japan (JP) plug, 180cm
14009-00020800	C14 Power cord with Australia (AU) plug, 180cm
14009-00020900	C14 Power cord with United Kingdom (UK) plug, 180cm
14009-00021000	C14 Power cord with Korea (KR) plug, 180cm
14009-00020700	C14 Power cord with Swiss (CH) plug, 180cm
14009-00021200	C14 Power cord with Taiwan (TW) plug, 180cm
14G1100083A0	C6 Power cord with United States (US) plug, 150cm
14G110060341	C6 Power cord with Europe (EU) plug, 80cm
14G110008300	C6 Power cord with China (CN) plug, 80cm
14G110008330	C6 Power cord with Japan (JP) plug, 80cm
14G110060365	C6 Power cord with Australia (AU) plug, 80cm
14G110008350	C6 Power cord with United Kingdom (UK) plug, 80cm
14G110008310	C6 Power cord with Korea (KR) plug, 80cm
14G1100083E0	C6 Power cord with Swiss (CH) plug, 80cm
14G11006032B	C6 Power cord with Taiwan (TW) plug, 80cm

* The part number might vary due to part number revision.

The specifications and price are subject to change without prior notice 2018 ASUSTek Computer Inc. All rights reserved.