# SMARC™-sAMX8X

## SMARC™ Module with low power i.MX8X series processor

- Up to 4x Cortex®-A35 + Cortex®-M4 processor
- Up to 4 GByte RAM
- Dual channel LVDS interface, HDMI, DP
- Up to 2x GByte Ethernet, 3x PCIe, 6x USB 2.0, 1x USB 3.0
- Kontron APPROTECT security solution based on Wibu-Systems CodeMeter®

POSSIBILITIES START HERE kontron S&T Group

## TECHNICAL INFORMATION

| | |
|---|---|
| COMPLIANCE | SMARC™ 2.0 |
| DIMENSIONS (H X W X D) | 82 x 50 mm |
| CPU | NXP dual/quad i.MX8X processor |
| MAIN MEMORY | Up to 3 GByte LP-DDR4 |
| ETHERNET | up to 2x 10/100/1000 MBit Ethernet |
| STORAGE | 1x SDIO |
| FLASH ONBOARD | 2-64 GByte eMMC |
| PCI EXPRESS® SUPPORT | 1x PCIe with dual core processor<br>up to PCIe x3 (on request) |
| PANEL SIGNAL | 1x LVDS dual channel |
| DISPLAY | HDMI, DP |
| USB | up to 6x USB 2.0, 1x USB 3.0 |
| SERIAL | 4x serial interfaces (2x RX / TX only) |
| OTHERS | I2S, 4x I2C, 2xSPI, MIPI CSI, 12x GPIO, 2x CAN |
| SPECIAL FEATURES | Security Chip (Support of Kontron Approtect) on request |
| BOOT LOADER | Uboot |
| OPERATING SYSTEM | Yocto Linux |
| POWER SUPPLY | 3 V – 5.25 V operates directly from single level Lithium Ion cells or fixed<br>3.3 V – 5 V power supplies |
| TEMPERATURE | Operating: extended consumer -40 °C to + 85 °C<br>Non-Operating: -40 °C to +85 °C |
| HUMIDITY | 93 % relative Humidity at 40 °C, non-condensing (according to IEC 60068-2-78) |

## CPU VARIANTS

| CPU | NXP i.MX8X quadX+ | NXP i.MX8X dualX+ | NXP i.MX8X dual X |
|---|---|---|---|
| CORES | 4 | 2 | 2 |
| FREQUENCY BASE | 1.20 GHz | 1.20 GHz | 1.20 GHz |
| FREQUENCY BURST | - | - | - |
| TDP | - | - | - |
| CACHE | 512 KB with ECC | 512 KB with ECC | 512 KB with ECC |

## BLOCK DIAGRAM

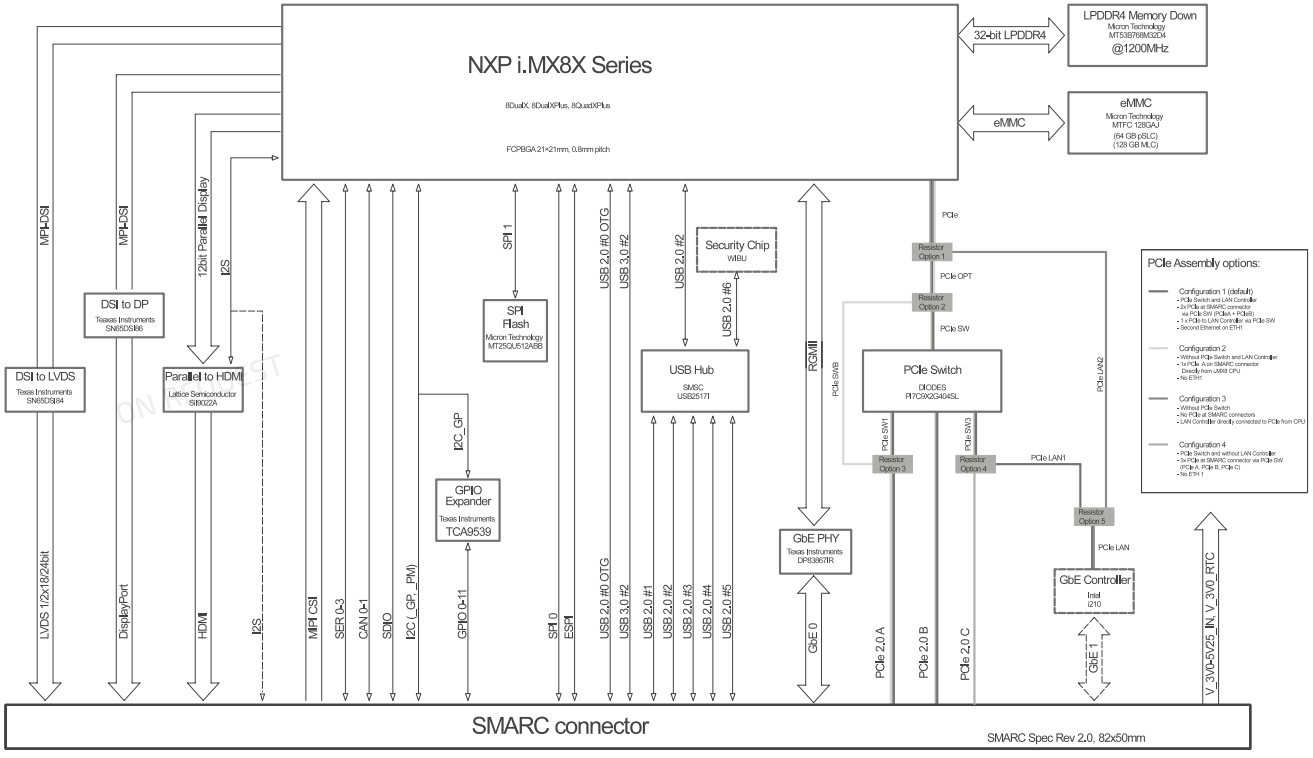


## VARIANTS

| PART NO. | CPU | RAM | FLASH | DISPLAY | LAN | TPM | SECURITY CHIP | TEMPERATURE |
|---|---|---|---|---|---|---|---|---|
| 51010-3008-12-4+ | NXP i.MX8X quadX+ | 3 GByte LPDDR4 | 8 GByte eMMC pSLC | LVDS, DP | 2x | yes | no | industrial E2 |
| 51010-1508-12-2+ | NXP i.MX8X dualX+ | 1,5 GByte LPDDR4 | 8 GByte eMMC pSLC | LVDS, DP | 2x | yes | no | industrial E2 |
| 51010-1004-12-2 | NXP i.MX8X dual X | 1 GByte LPDDR4 | 4 GByte eMMC pSLC | LVDS | 1x | yes | no | industrial E2 |

## CARRIER

| ARTICLE | PART NO. | DESCRIPTION |
|---|---|---|
| SMARC EVALUATION CARRIER 2.0 | 51300-0000-00-0 | SMARC Evaluation Carrier for SMARC modules according to the SMARC 2.0 standard (without SMARC module) |

## COOLING

| ARTICLE | PART NO. | DESCRIPTION |
|---|---|---|
| HSP SMARC-sAMX8X | 51010-0000-99-1 | Heatspreader for SMARC-sAMX8X |

contact@steliau.fr
steliau.fr
6 rue des Gémeaux, 94150, Rungis

STELIAU
TECHNOLOGY - FRANCE

Copyright © 2021 Kontron. All rights reserved. All data is for information purposes only and not guaranteed for legal purposes. Information has been carefully checked and is believed to be accurate; however, no responsibility is assumed for inaccuracies. Kontron and the Kontron logo and all other trademarks or registered trademarks are the property of their respective owners and are recognized. Specifications are subject to change without notice. SMARC-sAMX8X-20210406-WMH