COMe-bV26

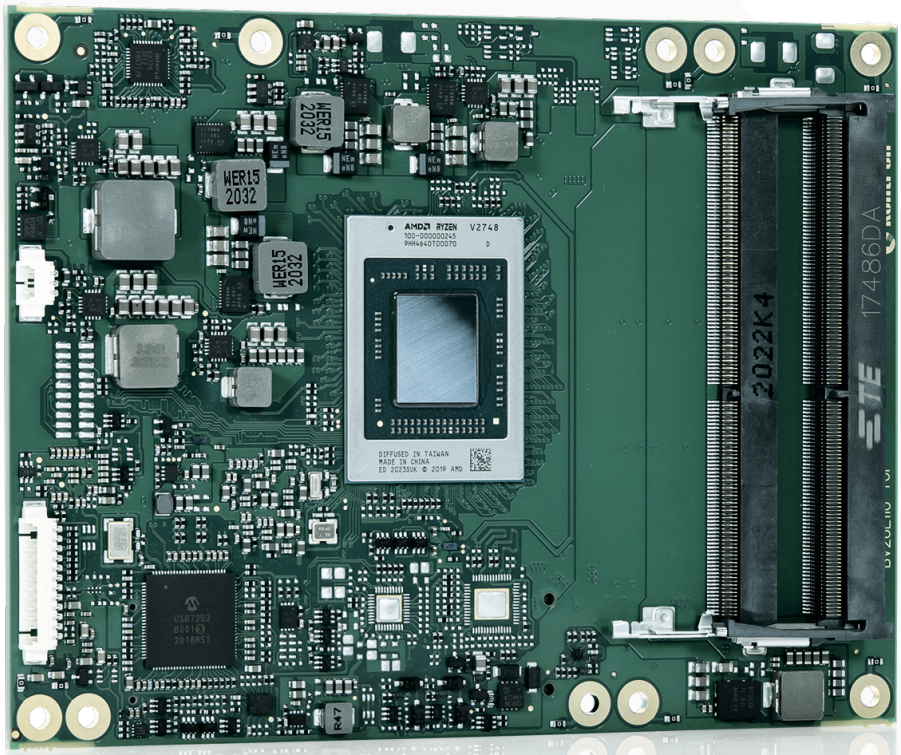

COM Express® Basic Type 6 with AMD Ryzen™ Embedded V-Series V2000 SoCs

- Up to 64 GByte DDR4 memory
- Up to 2.5 Gb Ethernet
- Optional NVMe SSD onboard

kontron

Technical Information

COMPLIANCE	COM Express® basic Pin-out type 6
DIMENSIONS (H X W X D)	95 x 125 mm
CPU	AMD Ryzen™ Embedded V-Series V2000 SoCs: AMD V2748, 8x 2.9 GHz, 35-54 W AMD V2718, 8x 1.7 GHz, 12-25 W AMD V2546, 6x 3.0 GHz, 35-54 W AMD V2516, 6x2.1 GHz, 12-25 W
CHIPSET	Integrated SoC
MAIN MEMORY	2x DDR4 SO-DIMM with up to 32 GByte per channel (non-ECC/ECC)
GRAPHICS CONTROLLER	AMD Radeon™ GPU
ETHERNET CONTROLLER	Intel® i225
ETHERNET	Up to 2.5 Gb Ethernet
STORAGE	2x SATA 6Gb/s
FLASH ONBOARD	Up to 1 TByte NVMe SSD (on request)
PCI EXPRESS®	4x PCIe 3.0 (up to 8 GT/s) 4x PCIe 2.0 (up to 5 GT/s) via PCIe switch 1x PEG x8
DISPLAY	DDI1: DP++, DDI2: DP++, DDI3: DP++, VGA: -, eDP
USB	4x USB 3.1 (incl. USB 2.0) + 4x USB 2.0
SERIAL	2x serial interface (RX/TX only)
AUDIO	High Definition Audio interface
OTHER FEATURES	SPI, LPC, SMB, Fast I²C, Staged Watchdog, RTC
SPECIAL FEATURES	POSCAP capacitors, Trusted Platform Module TPM 2.0
FEATURES ON REQUEST	LVDS (Dual Channel 18/24bit) instead of eDP, VGA, NVMe SSD, Fail Safe via 2nd SPI Flash, Industrial grade -40 °C to +85 °C
POWER MANAGEMENT	ACPI 6.0
POWER SUPPLY	8.5 V – 20 V Wide Range, Single Supply Power
BIOS	AMI Aptio V
OPERATING SYSTEM	Windows®10, Linux
TEMPERATURE	Commercial temperature: 0 °C to +60 °C operating, -30 °C to +85 °C non-operating Extended temperature: -25 °C to +75 °C operating, -30 °C to +85 °C non-operating
HUMIDITY	93 % relative Humidity at 40 °C, non-condensing (according to IEC 60068-2-78)

Block Diagram

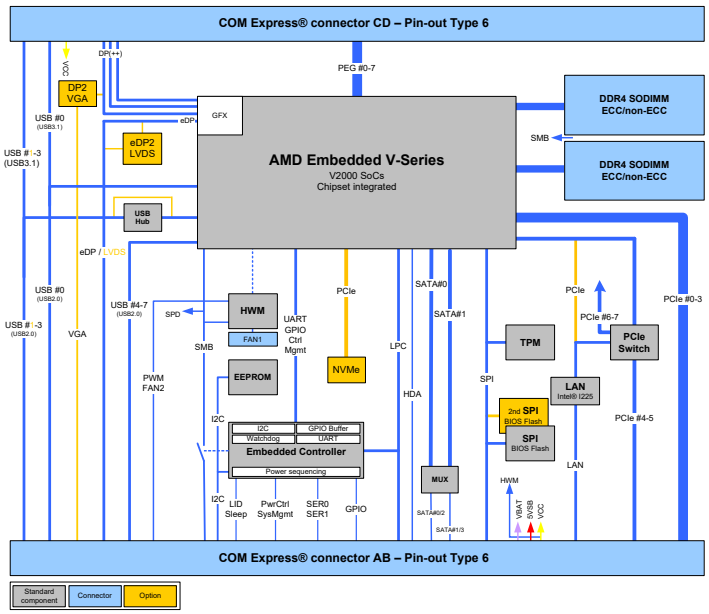

CPU Variants

CPU	V2748	V2718	V2546	V2516
CORES	8	8	6	6
FREQUENCY BASE/TURBO	2.9/4.25 GHz	1.7/4.15 GHz	3/3.95 GHz	2.10/3.95 GHz
TDP	35/54 W	12/25 W	35/54 W	12/25 W
CACHE	4 MByte	4 MByte	3 MByte	3 MByte

Variants

PART NO.	CPU	PCH	MEM. DOWN	SO-DIMM	FLASH	OP. TEMPERATURE
38036-0000-29-8 *	V2748	integrated	-	non-ECC/ECC	-	0 °C - 60 °C
38036-0000-17-8 *	V2718	integrated	-	non-ECC/ECC	-	0 °C - 60 °C
38036-0000-30-6 *	V2546	integrated	-	non-ECC/ECC	-	0 °C - 60 °C
38036-0000-21-6 *	V2516	integrated	-	non-ECC/ECC	-	0 °C - 60 °C

* Qualified for E1 temperature range (-25 °C to +75 °C) and available project based only

Carrier

ARTICLE	PART NO.	DESCRIPTION
COME EVAL CARRIER2 T6	38116-0000-00-5	COM Express® Evaluation Carrier Type 6

Cooling

ARTICLE	PART NO.	DESCRIPTION
HSP COME-BV26 CU-CORE THREADED	38036-0000-99-0	Heatspreader for COMe-bV26, Cu-core, threaded mounting holes
HSP COME-BV26 CU-CORE THROUGH	38036-0000-99-1	Heatspreader for COMe-bV26, Cu-core, through mounting holes
HSK COME-BASIC ACTIVE (W/O HSP)	38025-0000-99-0C05	Active Cooler for COMe-bxL6/bDV7 to be mounted on HSP
HSK COME-BASIC PASSIVE (W/O HSP)	38025-0000-99-0C06	Passive Cooler for COMe-bxL6/bDV7 to be mounted on HSP

Memory

PART NO.	MIN. SPEC.	SIZE	ECC	OP. TEMPERATURE
97020-3232-BV26	DDR4-3200	32 GByte	no	0 °C - 60 °C
97020-1632-BV26	DDR4-3200	16 GByte	no	0 °C - 60 °C
97020-0832-BV26	DDR4-3200	8 GByte	no	0 °C - 60 °C
97020-0432-BV26	DDR4-3200	4 GByte	no	0 °C - 60 °C
97030-3232-BV26	DDR4-3200	32 GByte	yes	0 °C - 60 °C
97030-1632-BV26	DDR4-3200	16 GByte	yes	0 °C - 60 °C
97030-0832-BV26	DDR4-3200	8 GByte	yes	0 °C - 60 °C
97030-0432-BV26	DDR4-3200	4 GByte	yes	0 °C - 60 °C
97021-3232-BV26*	DDR4-3200	32 GByte	no	-40 °C - 85 °C
97021-1632-BV26*	DDR4-3200	16 GByte	no	-40 °C - 85 °C
97021-0832-BV26*	DDR4-3200	8 GByte	no	-40 °C - 85 °C
97021-0432-BV26*	DDR4-3200	4 GByte	no	-40 °C - 85 °C

* Corresponding memory modules in case of project based E1 temperature range variants

contact@steliau.fr
steliau.fr
6 rue des Gémeaux, 94150, Rungis

STELIAU
TECHNOLOGY - FRANCE

Copyright © 2023 Kontron. All rights reserved. All data is for information purposes only and not guaranteed for legal purposes. Information has been carefully checked and is believed to be accurate;however, no responsibility is assumed for inaccuracies. Kontron and the Kontron logo and all other trademarks or registered trademarks are the property of their respective owners and are recognized.Specifications are subject to change without notice. COMe-bV26-20230301 - bmy