COMe-bTL6 (E2)

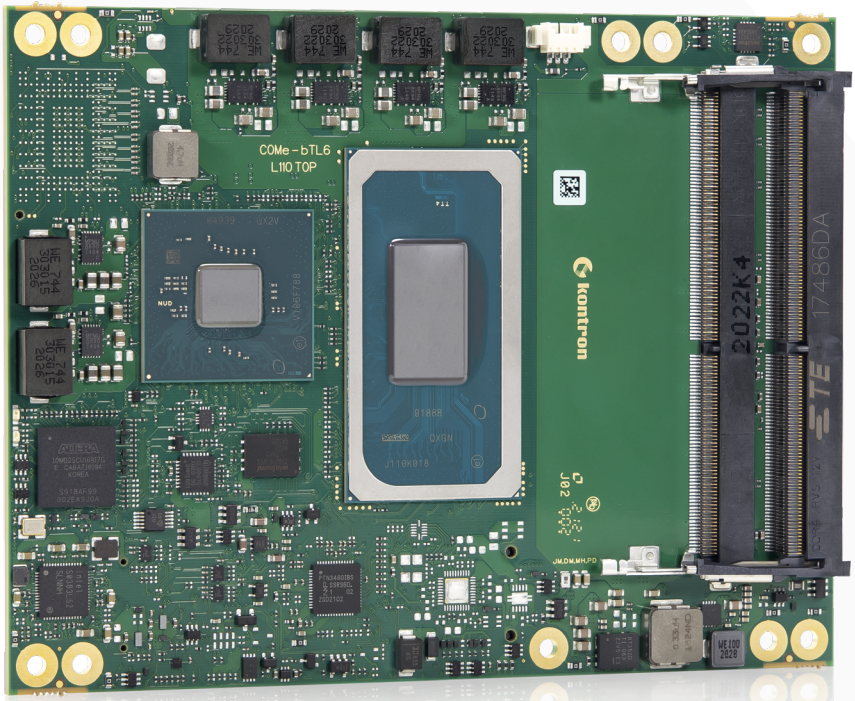

COM Express® Basic Type 6 with 11th Generation Intel® Xeon®/Core™/Celeron® Processors

- Up to 128 GByte DDR4 memory
- Up to 2.5 Gb Ethernet with TSN support
- Optional NVMe SSD onboard
- Industrial grade versions

Technical Information

COMPLIANCE	COM Express® basic, Pin-out Type 6
DIMENSIONS (H x W)	125 x 95 mm
CPU	Intel® 11th Generation Xeon®/Core™/Celeron® family For details see table (CPU variants) given below
CHIPSET	Intel® Mobile RM590E/Intel® Mobile QM580E/Intel® Mobile HM570E
MAIN MEMORY	Up to 4x DDR4-3200 SO-DIMM with up to 128 GByte (non-ECC/ECC) (3rd/4th socket on request)
GRAPHICS CONTROLLER	Intel® UHD Graphics
ETHERNET CONTROLLER	Intel® I225LM/I225IT
ETHERNET	Up to 2.5 Gb Ethernet with TSN support (depending on SKU)
STORAGE	4x SATA 6Gb/s
FLASH ONBOARD	Up to 1 TByte NVMe SSD (on request)
PCI EXPRESS®	8x PCIe x1, 1x PEG x16
DISPLAY	DDI1: DP++, DDI2: DP++, DDI3: DP++, VGA: -, LVDS: Dual Channel 18/24bit
USB	4x USB 3.1 (incl. USB 2.0) + 4x USB 2.0
SERIAL	2x serial interface (RX/TX only)
AUDIO	Intel® High Definition Audio
OTHER FEATURES	(G)SPI, LPC, SMB, Fast I²C, Staged Watchdog, RTC
SPECIAL FEATURES	POSCAP capacitors, Trusted Platform Module TPM 2.0
FEATURES ON REQUEST	vPRO (AMT/TXT/AES Support), eDP instead of LVDS, VGA, 3rd/4th DDR4 SO-DIMM socket, NVMe SSD, Fail Safe via 2nd SPI Flash
POWER MANAGEMENT	ACPI 6.0
POWER SUPPLY	8.5 V – 20 V Wide Range, Single Supply Power
BIOS	AMI Aptio V
OPERATING SYSTEM	Windows® 10, Linux, VxWorks
TEMPERATURE	Commercial temperature: 0 °C to +60 °C operating, -30 °C to +85 °C non-operating Extended temperature: -25 °C to +75 °C operating, -30 °C to +85 °C non-operating Industrial temperature: -40 °C to +85 °C operating, -40 °C to +85 °C non-operating
HUMIDITY	93 % relative Humidity at 40 °C, non-condensing (according to IEC 60068-2-78)

Block Diagram

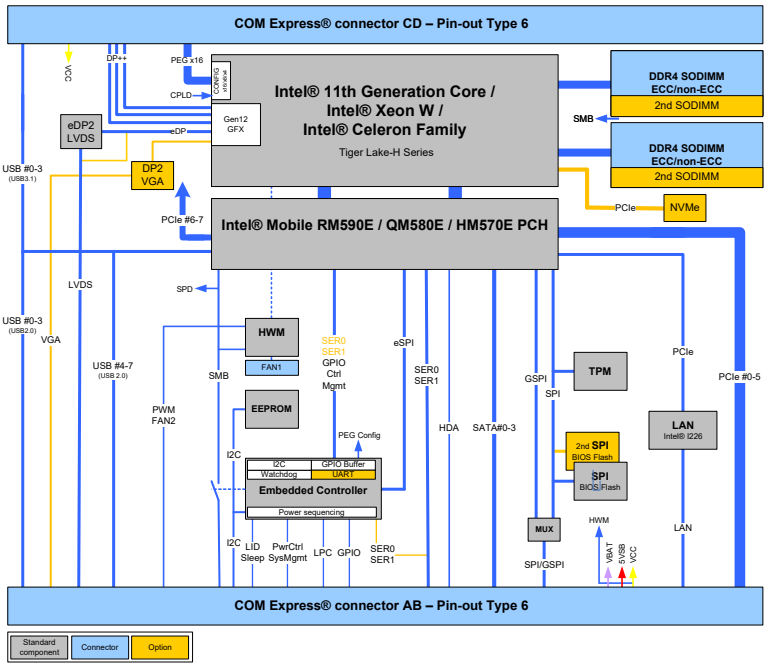

CPU Variants

11th GENERATION	CORES	FREQUENCY BASE/ TURBO	TDP	CACHE	TCC/TSN	TEMPERATURE
W-11865MLE	8	1.5/4.5 GHz	25 W	24 MByte	no	commercial
W-11555MLE	6	1.9/4.4 GHz	25 W	12 MByte	no	commercial
W-11155MLE	4	1.8/3.1 GHz	25 W	8 MByte	no	commercial
i7-11850HE	8	2.6/4.7 GHz	45/35 W	24 MByte	no	commercial
i5-11500HE	6	2.6/4.5 GHz	45/35 W	12 MByte	no	commercial
i3-11100HE	4	2.4/4.4 GHz	45/35 W	8 MByte	no	commercial
6600HE	2	2.6 GHz	35 W	8 MByte	no	commercial
W-11865MRE	8	2.6/4.7 GHz	45/35 W	24 MByte	yes	industrial
W-11555MRE	6	2.6/4.5 GHz	45/35 W	12 MByte	yes	industrial
W-11155MRE	4	2.4/4.4 GHz	45/35 W	8 MByte	yes	industrial

Variants

PART NO.	CPU	PCH	MEM. DOWN	SO-DIMM	FLASH	OP. TEMPERATURE
38038-0000-45-8	W-11865MLE	RM590E	-	non-ECC/ECC	-	0 °C - 60 °C
38038-0000-44-6	W-11555MLE	RM590E	-	non-ECC/ECC	-	0 °C - 60 °C
38038-0000-31-4	W-11155MLE	RM590E	-	non-ECC/ECC	-	0 °C - 60 °C
38038-0000-47-7	i7-11850HE	QM580E	-	non-ECC	-	0 °C - 60 °C
38038-0000-46-5	i5-11500HE	QM580E	-	non-ECC	-	0 °C - 60 °C
38038-0000-44-4	i3-11100HE	RM590E	-	non-ECC	-	0 °C - 60 °C
38038-0000-44-3	i3-11100HE	QM580E	-	non-ECC	-	0 °C - 60 °C
38038-0000-26-2	6600HE	HM570E	-	non-ECC	-	0 °C - 60 °C
38039-0000-47-8	W-11865MRE	RM590E	-	non-ECC/ECC	-	-40 °C - 85 °C
38039-0000-46-6	W-11555MRE	RM590E	-	non-ECC/ECC	-	-40 °C - 85 °C
38039-0000-44-4	W-11155MRE	RM590E	-	non-ECC/ECC	-	-40 °C - 85 °C

Carrier

ARTICLE	PART NO.	DESCRIPTION
COMe EVAL CARRIER2 T6	38116-0000-00-5	COM Express® Evaluation Carrier Type 6

Cooling

ARTICLE	PART NO.	DESCRIPTION
HSP COME-BTL6 CU-CORE THREADED	38038-0000-99-0	Heatspreader for COMe-bTL6, Cu-core, threaded mounting holes
HSP COME-BTL6 CU-CORE THROUGH	38038-0000-99-1	Heatspreader for COMe-bTL6, Cu-core, through mounting holes
HSK COME-BASIC ACTIVE (W/O HSP)	38025-0000-99-0C05	Active Cooler for COMe-bxL6/bDV7 to be mounted on HSP
HSK COME-BASIC PASSIVE (W/O HSP)	38025-0000-99-0C06	Passive Cooler for COMe-bxL6/bDV7 to be mounted on HSP

Memory

PART NO.	MIN. SPEC.	SIZE	ECC	OP. TEMPERATURE
97020-3232-BTL6	DDR4-3200	32 GByte	no	0 °C to +60 °C
97020-1632-BTL6	DDR4-3200	16 GByte	no	0 °C to +60 °C
97020-0832-BTL6	DDR4-3200	8 GByte	no	0 °C to +60 °C
97020-0432-BTL6	DDR4-3200	4 GByte	no	0 °C to +60 °C
97021-3232-BTL6	DDR4-3200	32 GByte	no	-40 °C to +85 °C
97021-1632-BTL6	DDR4-3200	16 GByte	no	-40 °C to +85 °C
97021-0832-BTL6	DDR4-3200	8 GByte	no	-40 °C to +85 °C
97021-0432-BTL6	DDR4-3200	4 GByte	no	-40 °C to +85 °C
97030-3232-BTL6	DDR4-3200	32 GByte	yes	0 °C to +60 °C
97030-1632-BTL6	DDR4-3200	16 GByte	yes	0 °C to +60 °C
97030-0832-BTL6	DDR4-3200	8 GByte	yes	0 °C to +60 °C
97030-0432-BTL6	DDR4-3200	4 GByte	yes	0 °C to +60 °C
97031-3232-BTL6	DDR4-3200	32 GByte	yes	-40 °C to +85 °C
97031-1632-BTL6	DDR4-3200	16 GByte	yes	-40 °C to +85 °C
97031-0832-BTL6	DDR4-3200	8 GByte	yes	-40 °C to +85 °C
97031-0432-BTL6	DDR4-3200	4 GByte	yes	-40 °C to +85 °C

contact@steliau.fr
steliau.fr
6 rue des Gémeaux, 94150, Rungis

STELIAU
TECHNOLOGY - FRANCE

Copyright © 2023 Kontron. All rights reserved. All data is for information purposes only and not guaranteed for legal purposes. Information has been carefully checked and is believed to be accurate;however, no responsibility is assumed for inaccuracies. Kontron and the Kontron logo and all other trademarks or registered trademarks are the property of their respective owners and are recognized.Specifications are subject to change without notice. COMe-bTL6 (E2)-20230725 - bmy