# COMe-bCL6(R E2S)

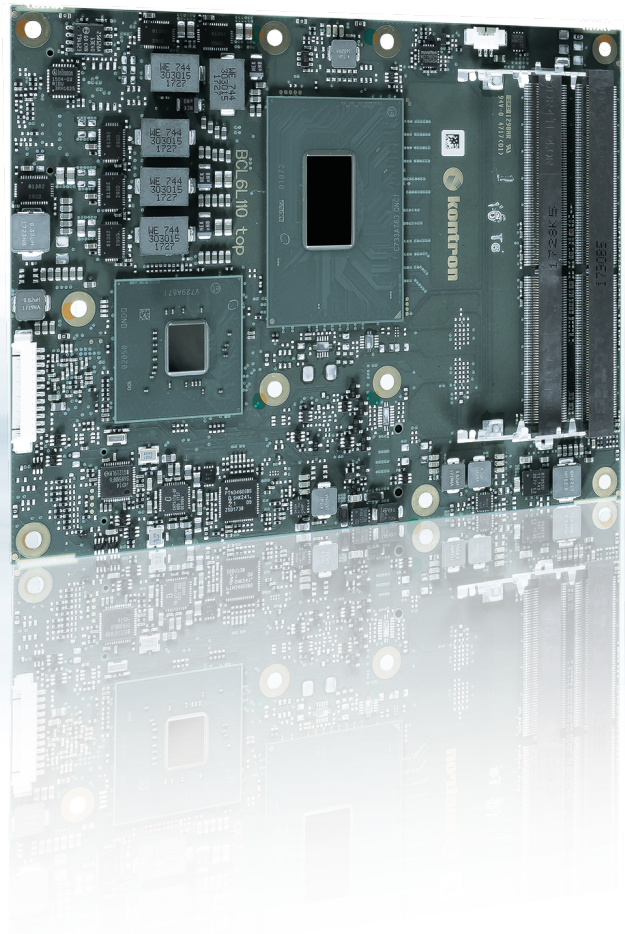

## COM Express® Basic Type 6
## with 8th/9th Generation Intel® Core™ / Xeon® Processors

- Intel® 8th/9th Generation Core™ series / Xeon® E family with CM246/QM370 PCH
- Up to 128 GByte DDR4 non-ECC/ECC memory
- Optional NVMe SSD onboard
- Industrial grade versions

POSSIBILITIES START HERE kontron S&T Group

## TECHNICAL INFORMATION

| | |
|---|---|
| COMPLIANCE | COM Express® basic, Pin-out Type 6 |
| DIMENSIONS (H X W) | 125 x 95 mm |
| CPU | Intel® 8th/9th Generation Core™ series / Xeon® E family<br>For details see table (CPU variants) given below |
| CHIPSET | Intel® Mobile CM246/Intel® Mobile QM370 |
| MAIN MEMORY | Up to 4x DDR4-2666 SO-DIMM with up to 128 GByte (non-ECC/ECC) (3rd/4th socket on request) |
| GRAPHICS CONTROLLER | Intel® UHD Graphics P630 for Xeon® processor<br>Intel® UHD Graphics 630 for Core™ processors<br>Intel® UHD Graphics 610 for Celeron® processors |
| ETHERNET CONTROLLER | Intel® I219LM |
| ETHERNET | 10/100/1000 MBit Ethernet |
| STORAGE | 4x SATA 6Gb/s |
| FLASH ONBOARD | Up to 1 TByte NVMe SSD (on request) |
| PCI EXPRESS® | 8x PCIe x1, 1x PEG x16 |
| DISPLAY | DDI1: DP++, DDI2: DP++, DDI3: DP++, VGA: -, LVDS: Dual Channel 18/24bit |
| USB | 4x USB 3.1 (incl. USB 2.0) + 4x USB 2.0 |
| SERIAL | 2x serial interface (RX/TX only) |
| AUDIO | Intel® High Definition Audio |
| OTHER FEATURES | SPI, LPC, SMB, Fast I²C, Staged Watchdog, RTC, support of Intel® Optane™ memory technology via PCIe |
| SPECIAL FEATURES | POSCAP capacitors, Trusted Platfom Module TPM 2.0, 4k Resolutions,<br>Flexible PEG lane configuration by Setup Option, Rapid shutdown (R E2S variants) |
| FEATURES ON REQUEST | vPRO (AMT/TXT/AES Support), eDP instead of LVDS, VGA, Intel® Mobile HM370 Chipset,<br>3rd/4th DDR4 SO-DIMM socket, NVMe SSD, Security Chip |
| POWER MANAGEMENT | ACPI 6.0 |
| POWER SUPPLY | 8.5 V – 20 V Wide Range, Single Supply Power |
| BIOS | AMI Aptio V |
| OPERATING SYSTEM | Windows® 10, Linux, VxWorks |
| TEMPERATURE | Commercial temperature: 0 °C to +60 °C operating, -30 °C to +85 °C non-operating<br>Extended temperature: -25 °C to +75 °C operating, -30 °C to +85 °C non-operating<br>Industrial temperature: -40 °C to +85 °C operating, -40 °C to +85 °C non-operating |
| HUMIDITY | 93 % relative Humidity at 40 °C, non-condensing (according to IEC 60068-2-78) |

## CPU VARIANTS

| | 8th GENERATION | | | |
|---|---|---|---|---|
| CPU | E-2176M | i7-8850H | i5-8400H | i3-8100H |
| CORES | 6 | 6 | 4 | 4 |
| FREQUENCY BASE/TURBO | 2.7/4.4 GHz | 2.6/4.3 GHz | 2.5/4.2 GHz | 3.0/- GHz |
| TDP | 45 W/35 W | 45 W/35 W | 45 W/35 W | 45 W/35 W |
| CACHE | 12 MByte | 9 MByte | 8 MByte | 6 MByte |

| | 9th GENERATION | | | | | | | | |
|---|---|---|---|---|---|---|---|---|---|
| CPU | E-2276ME | E-2276ML | E-2254ME | E-2254ML | i7-9850HE | i7-9850HL | i3-9100HL | G4930E | G4932E |
| CORES | 6 | 6 | 4 | 4 | 6 | 6 | 4 | 2 | 2 |
| FREQUENCY BASE/TURBO | 2.8/4.5 GHz | 2.0/4.2 GHz | 2.6/3.8 GHz | 1.7/3.5 GHz | 2.7/4.4 GHz | 1.9/4.1 GHz | 1.6/2.9 GHz | 2.4/- GHz | 1.9/- GHz |
| TDP | 45 W/35 W | 25 W | 45 W/35 W | 25 W | 45 W/35 W | 25 W | 25 W | 35 W | 25 W |
| CACHE | 12 MByte | 12 MByte | 8 MByte | 8 MByte | 9 MByte | 9 MByte | 6 MByte | 2 MByte | 2 MByte |

## BLOCK DIAGRAM

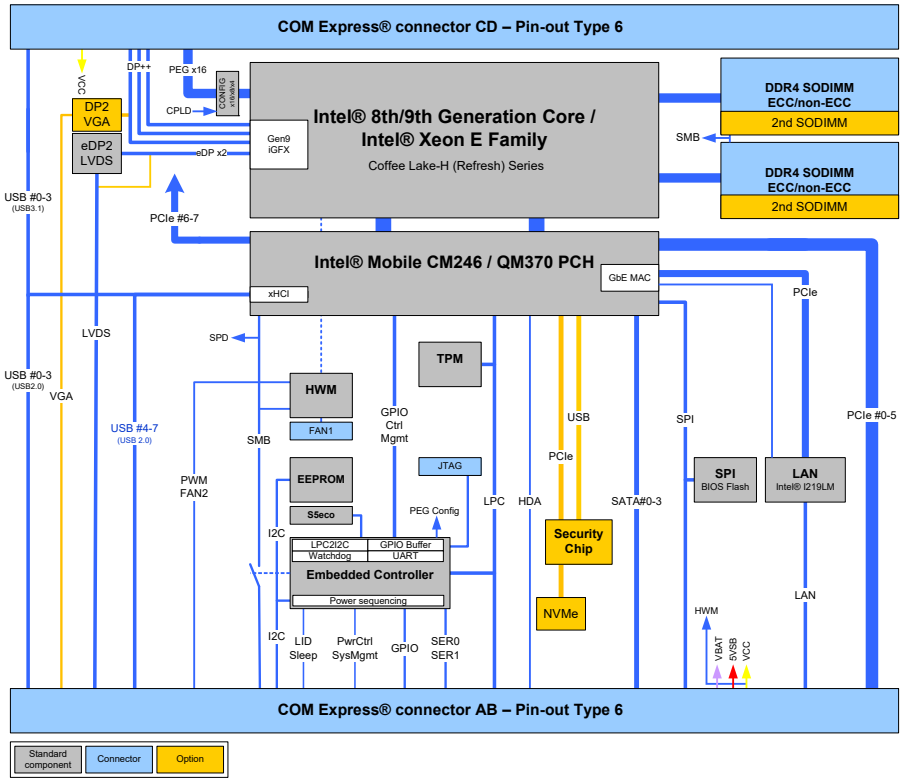


## VARIANTS

| PART NO. | CPU | PCH | SO-DIMM | FLASH | OP. TEMPERATURE |
|---|---|---|---|---|---|
| 38034-0000-27-6 | E-2176M | CM246 | non-ECC/ECC | - | 0 °C - 60 °C |
| 38034-0000-26-7 | i7-8850H | QM370 | non-ECC | - | 0 °C - 60 °C |
| 38034-0000-25-5 | i5-8400H | QM370 | non-ECC | - | 0 °C - 60 °C |
| 38034-0000-30-3 | i3-8100H | QM370 | non-ECC | - | 0 °C - 60 °C |
| 38034-0000-28-6 | E-2276ME | CM246 | non-ECC/ECC | - | 0 °C - 60 °C |
| 38034-0000-20-6 | E-2276ML | CM246 | non-ECC/ECC | - | 0 °C - 60 °C |
| 38034-0000-26-4 | E-2254ME | CM246 | non-ECC/ECC | - | 0 °C - 60 °C |
| 38034-0000-17-4 | E-2254ML | CM246 | non-ECC/ECC | - | 0 °C - 60 °C |
| 38034-0000-27-7 | i7-9850HE | QM370 | non-ECC | - | 0 °C - 60 °C |
| 38034-0000-19-7 | i7-9850HL | QM370 | non-ECC | - | 0 °C - 60 °C |
| 38034-0000-16-3 | i3-9100HL | QM370 | non-ECC | - | 0 °C - 60 °C |
| 38034-0000-24-2 | G4930E | QM370 | non-ECC | - | 0 °C - 60 °C |
| 38034-0000-19-2 | G4932E | QM370 | non-ECC | - | 0 °C - 60 °C |
| 38035-0000-27-6 | E-2176M | CM246 | non-ECC/ECC | - | -40 °C - 85 °C |
| 38035-0000-26-7 | i7-8850H | QM370 | non-ECC | - | -40 °C - 85 °C |
| 38035-0000-25-5 | i5-8400H | QM370 | non-ECC | - | -40 °C - 85 °C |
| 38035-0000-30-3 | i3-8100H | CM246 | non-ECC/ECC | - | -40 °C - 85 °C |
| 38035-0000-28-6 | E-2276ME | CM246 | non-ECC/ECC | - | -40 °C - 85 °C |
| 38035-0000-20-6 | E-2276ML | CM246 | non-ECC/ECC | - | -40 °C - 85 °C |
| 38035-0000-26-4 | E-2254ME | CM246 | non-ECC/ECC | - | -40 °C - 85 °C |
| 38035-0000-17-4 | E-2254ML | CM246 | non-ECC/ECC | - | -40 °C - 85 °C |
| 38035-0000-27-7 | i7-9850HE | QM370 | non-ECC | - | -40 °C - 85 °C |
| 38035-0000-19-7 | i7-9850HL | QM370 | non-ECC | - | -40 °C - 85 °C |
| 38035-0000-16-3 | i3-9100HL | CM246 | non-ECC/ECC | - | -40 °C - 85 °C |
| 38035-0000-24-2 | G4930E | CM246 | non-ECC/ECC | - | -40 °C - 85 °C |
| 38035-0000-19-2 | G4932E | CM246 | non-ECC/ECC | - | -40 °C - 85 °C |

## CARRIER

| ARTICLE | PART NO. | DESCRIPTION |
|---|---|---|
| COMe EVAL CARRIER2 T6 | 38116-0000-00-5 | COM Express® Evaluation Carrier Type 6 |
| COMe REF.CARRIER–I T6 TMI | 38115-0000-00-x | COM Express® Reference Carrier Type 6 for industrial temperature |

## COOLING

| ARTICLE | PART NO. | DESCRIPTION |
|---|---|---|
| HSP COMe-bSL6/bKL6/bCL6 CU-CORE THREADED | 38030-0000-99-0 | Heatspreader for COMe-bSL6/COMe-bKL6/COMe-bCL6, Cu-core, threaded mounting holes |
| HSP COMe-bSL6/bKL6/bCL6 CU-CORE THROUGH | 38030-0000-99-1 | Heatspreader for COMe-bSL6/COMe-bKL6/COMe-bCL6, Cu-core, through mounting holes |
| HSK COMe-BASIC ACTIVE (W/O HSP) | 38025-0000-99-0C05 | Active Cooler for COMe-bxL6/bDV7 to be mounted on HSP |
| HSK COMe-BASIC PASSIVE (W/O HSP) | 38025-0000-99-0C06 | Passive Cooler for COMe-bxL6/bDV7 to be mounted on HSP |

## MEMORY

| PART NO. | MIN. SPEC. | SIZE | ECC | OP. TEMPERATURE |
|---|---|---|---|---|
| 97017-3200-27-0 | DDR4-2666 | 32 GByte | no | 0 °C to +60 °C |
| 97017-1600-27-0 | DDR4-2666 | 16 GByte | no | 0 °C to +60 °C |
| 97017-8192-27-0 | DDR4-2666 | 8 GByte | no | 0 °C to +60 °C |
| 97017-4096-27-0 | DDR4-2666 | 4 GByte | no | 0 °C to +60 °C |
| 97017-3200-27-2 | DDR4-2666 | 32 GByte | no | -40 °C to +85 °C |
| 97017-1600-27-2 | DDR4-2666 | 16 GByte | no | -40 °C to +85 °C |
| 97017-8192-27-2 | DDR4-2666 | 8 GByte | no | -40 °C to +85 °C |
| 97017-4096-27-2 | DDR4-2666 | 4 GByte | no | -40 °C to +85 °C |
| 97018-3200-27-0 | DDR4-2666 | 32 GByte | yes | 0 °C to +60 °C |
| 97018-1600-27-0 | DDR4-2666 | 16 GByte | yes | 0 °C to +60 °C |
| 97018-8192-27-0 | DDR4-2666 | 8 GByte | yes | 0 °C to +60 °C |
| 97018-4096-27-0 | DDR4-2666 | 4 GByte | yes | 0 °C to +60 °C |
| 97018-3200-27-2 | DDR4-2666 | 32 GByte | yes | -40 °C to +85 °C |
| 97018-1600-27-2 | DDR4-2666 | 16 GByte | yes | -40 °C to +85 °C |
| 97018-8192-27-2 | DDR4-2666 | 8 GByte | yes | -40 °C to +85 °C |
| 97018-4096-27-2 | DDR4-2666 | 4 GByte | yes | -40 °C to +85 °C |

contact@steliau.fr
steliau.fr
6 rue des Gémeaux, 94150, Rungis

STELIAU
TECHNOLOGY - FRANCE

Copyright © 2022 Kontron. All rights reserved. All data is for information purposes only and not guaranteed for legal purposes. Information has been carefully checked and is believed to be accurate; however, no responsibility is assumed for inaccuracies. Kontron and the Kontron logo and all other trademarks or registered trademarks are the property of their respective owners and are recognized. Specifications are subject to change without notice. COMe-bCL6 (R E2S)-20220221 - WMH