COMe-bCL6(R E2S)

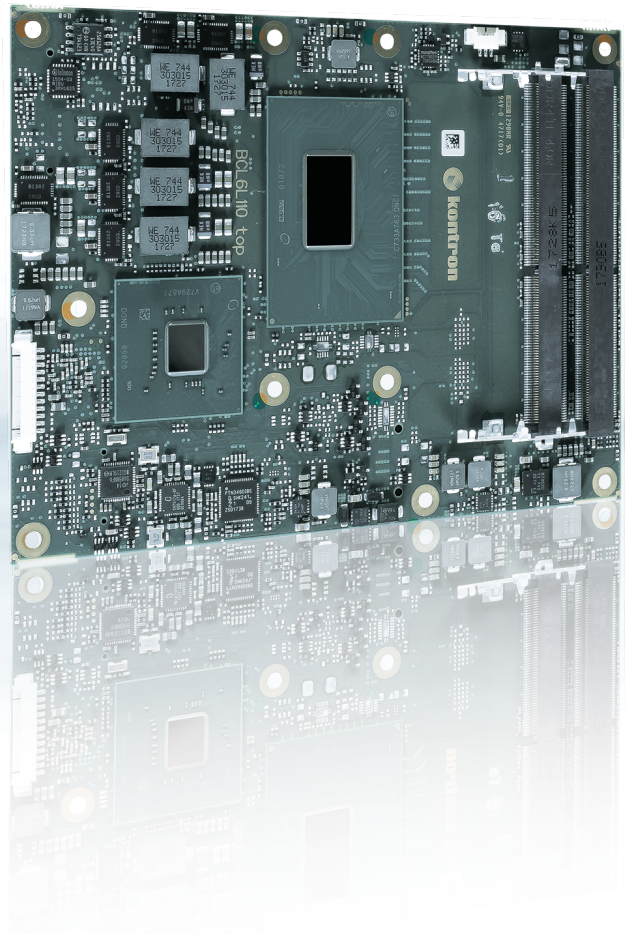

COM Express® Basic Type 6
with 8th/9th Generation Intel® Core™ / Xeon® Processors

- Intel® 8th/9th Generation Core™ series / Xeon® E family with CM246/QM370 PCH
- Up to 128 GByte DDR4 non-ECC/ECC memory
- Optional NVMe SSD onboard
- Industrial grade versions

POSSIBILITIES START HERE kontron S&T Group

TECHNICAL INFORMATION

COMPLIANCE	COM Express® basic, Pin-out Type 6
DIMENSIONS (H X W)	125 x 95 mm
CPU	Intel® 8th/9th Generation Core™ series / Xeon® E family For details see table (CPU variants) given below
CHIPSET	Intel® Mobile CM246/Intel® Mobile QM370
MAIN MEMORY	Up to 4x DDR4-2666 SO-DIMM with up to 128 GByte (non-ECC/ECC) (3rd/4th socket on request)
GRAPHICS CONTROLLER	Intel® UHD Graphics P630 for Xeon® processor Intel® UHD Graphics 630 for Core™ processors Intel® UHD Graphics 610 for Celeron® processors
ETHERNET CONTROLLER	Intel® I219LM
ETHERNET	10/100/1000 MBit Ethernet
STORAGE	4x SATA 6Gb/s
FLASH ONBOARD	Up to 1 TByte NVMe SSD (on request)
PCI EXPRESS®	8x PCIe x1, 1x PEG x16
DISPLAY	DDI1: DP++, DDI2: DP++, DDI3: DP++, VGA: -, LVDS: Dual Channel 18/24bit
USB	4x USB 3.1 (incl. USB 2.0) + 4x USB 2.0
SERIAL	2x serial interface (RX/TX only)
AUDIO	Intel® High Definition Audio
OTHER FEATURES	SPI, LPC, SMB, Fast I²C, Staged Watchdog, RTC, support of Intel® Optane™ memory technology via PCIe
SPECIAL FEATURES	POSCAP capacitors, Trusted Platfom Module TPM 2.0, 4k Resolutions, Flexible PEG lane configuration by Setup Option, Rapid shutdown (R E2S variants)
FEATURES ON REQUEST	vPRO (AMT/TXT/AES Support), eDP instead of LVDS, VGA, Intel® Mobile HM370 Chipset, 3rd/4th DDR4 SO-DIMM socket, NVMe SSD, Security Chip
POWER MANAGEMENT	ACPI 6.0
POWER SUPPLY	8.5 V – 20 V Wide Range, Single Supply Power
BIOS	AMI Aptio V
OPERATING SYSTEM	Windows® 10, Linux, VxWorks
TEMPERATURE	Commercial temperature: 0 °C to +60 °C operating, -30 °C to +85 °C non-operating Extended temperature: -25 °C to +75 °C operating, -30 °C to +85 °C non-operating Industrial temperature: -40 °C to +85 °C operating, -40 °C to +85 °C non-operating
HUMIDITY	93 % relative Humidity at 40 °C, non-condensing (according to IEC 60068-2-78)

CPU VARIANTS

	8th GENERATION			
CPU	E-2176M	i7-8850H	i5-8400H	i3-8100H
CORES	6	6	4	4
FREQUENCY BASE/TURBO	2.7/4.4 GHz	2.6/4.3 GHz	2.5/4.2 GHz	3.0/- GHz
TDP	45 W/35 W	45 W/35 W	45 W/35 W	45 W/35 W
CACHE	12 MByte	9 MByte	8 MByte	6 MByte

	9th GENERATION								
CPU	E-2276ME	E-2276ML	E-2254ME	E-2254ML	i7-9850HE	i7-9850HL	i3-9100HL	G4930E	G4932E
CORES	6	6	4	4	6	6	4	2	2
FREQUENCY BASE/TURBO	2.8/4.5 GHz	2.0/4.2 GHz	2.6/3.8 GHz	1.7/3.5 GHz	2.7/4.4 GHz	1.9/4.1 GHz	1.6/2.9 GHz	2.4/- GHz	1.9/- GHz
TDP	45 W/35 W	25 W	45 W/35 W	25 W	45 W/35 W	25 W	25 W	35 W	25 W
CACHE	12 MByte	12 MByte	8 MByte	8 MByte	9 MByte	9 MByte	6 MByte	2 MByte	2 MByte

BLOCK DIAGRAM

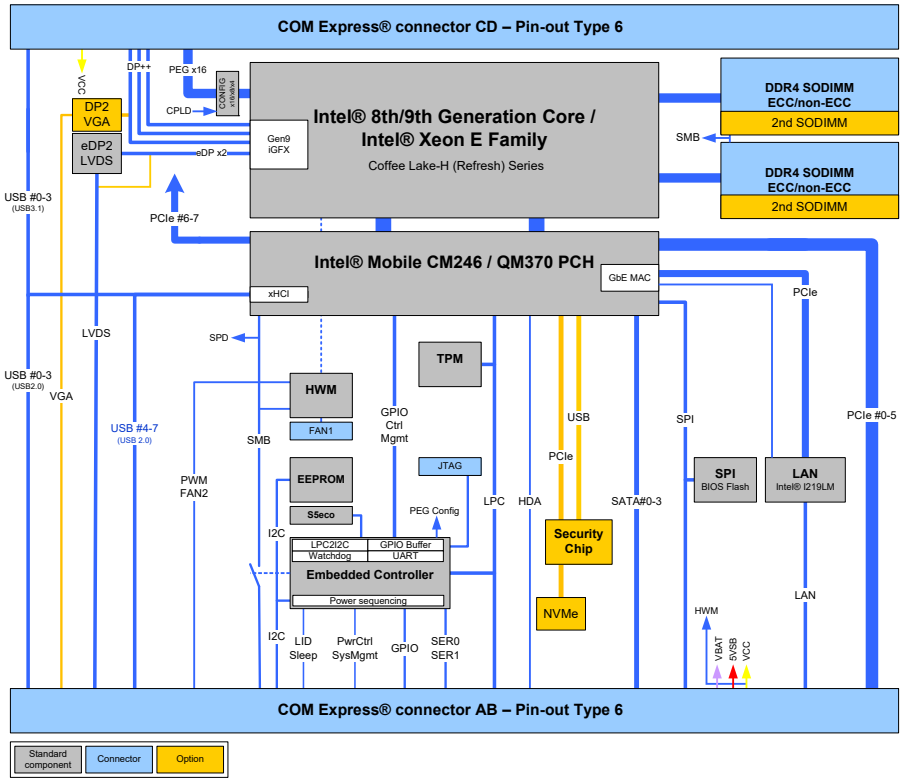

VARIANTS

PART NO.	CPU	PCH	SO-DIMM	FLASH	OP. TEMPERATURE
38034-0000-27-6	E-2176M	CM246	non-ECC/ECC	-	0 °C - 60 °C
38034-0000-26-7	i7-8850H	QM370	non-ECC	-	0 °C - 60 °C
38034-0000-25-5	i5-8400H	QM370	non-ECC	-	0 °C - 60 °C
38034-0000-30-3	i3-8100H	QM370	non-ECC	-	0 °C - 60 °C
38034-0000-28-6	E-2276ME	CM246	non-ECC/ECC	-	0 °C - 60 °C
38034-0000-20-6	E-2276ML	CM246	non-ECC/ECC	-	0 °C - 60 °C
38034-0000-26-4	E-2254ME	CM246	non-ECC/ECC	-	0 °C - 60 °C
38034-0000-17-4	E-2254ML	CM246	non-ECC/ECC	-	0 °C - 60 °C
38034-0000-27-7	i7-9850HE	QM370	non-ECC	-	0 °C - 60 °C
38034-0000-19-7	i7-9850HL	QM370	non-ECC	-	0 °C - 60 °C
38034-0000-16-3	i3-9100HL	QM370	non-ECC	-	0 °C - 60 °C
38034-0000-24-2	G4930E	QM370	non-ECC	-	0 °C - 60 °C
38034-0000-19-2	G4932E	QM370	non-ECC	-	0 °C - 60 °C
38035-0000-27-6	E-2176M	CM246	non-ECC/ECC	-	-40 °C - 85 °C
38035-0000-26-7	i7-8850H	QM370	non-ECC	-	-40 °C - 85 °C
38035-0000-25-5	i5-8400H	QM370	non-ECC	-	-40 °C - 85 °C
38035-0000-30-3	i3-8100H	CM246	non-ECC/ECC	-	-40 °C - 85 °C
38035-0000-28-6	E-2276ME	CM246	non-ECC/ECC	-	-40 °C - 85 °C
38035-0000-20-6	E-2276ML	CM246	non-ECC/ECC	-	-40 °C - 85 °C
38035-0000-26-4	E-2254ME	CM246	non-ECC/ECC	-	-40 °C - 85 °C
38035-0000-17-4	E-2254ML	CM246	non-ECC/ECC	-	-40 °C - 85 °C
38035-0000-27-7	i7-9850HE	QM370	non-ECC	-	-40 °C - 85 °C
38035-0000-19-7	i7-9850HL	QM370	non-ECC	-	-40 °C - 85 °C
38035-0000-16-3	i3-9100HL	CM246	non-ECC/ECC	-	-40 °C - 85 °C
38035-0000-24-2	G4930E	CM246	non-ECC/ECC	-	-40 °C - 85 °C
38035-0000-19-2	G4932E	CM246	non-ECC/ECC	-	-40 °C - 85 °C

CARRIER

ARTICLE	PART NO.	DESCRIPTION
COMe EVAL CARRIER2 T6	38116-0000-00-5	COM Express® Evaluation Carrier Type 6
COMe REF.CARRIER–I T6 TMI	38115-0000-00-x	COM Express® Reference Carrier Type 6 for industrial temperature

COOLING

ARTICLE	PART NO.	DESCRIPTION
HSP COMe-bSL6/bKL6/bCL6 CU-CORE THREADED	38030-0000-99-0	Heatspreader for COMe-bSL6/COMe-bKL6/COMe-bCL6, Cu-core, threaded mounting holes
HSP COMe-bSL6/bKL6/bCL6 CU-CORE THROUGH	38030-0000-99-1	Heatspreader for COMe-bSL6/COMe-bKL6/COMe-bCL6, Cu-core, through mounting holes
HSK COMe-BASIC ACTIVE (W/O HSP)	38025-0000-99-0C05	Active Cooler for COMe-bxL6/bDV7 to be mounted on HSP
HSK COMe-BASIC PASSIVE (W/O HSP)	38025-0000-99-0C06	Passive Cooler for COMe-bxL6/bDV7 to be mounted on HSP

MEMORY

PART NO.	MIN. SPEC.	SIZE	ECC	OP. TEMPERATURE
97017-3200-27-0	DDR4-2666	32 GByte	no	0 °C to +60 °C
97017-1600-27-0	DDR4-2666	16 GByte	no	0 °C to +60 °C
97017-8192-27-0	DDR4-2666	8 GByte	no	0 °C to +60 °C
97017-4096-27-0	DDR4-2666	4 GByte	no	0 °C to +60 °C
97017-3200-27-2	DDR4-2666	32 GByte	no	-40 °C to +85 °C
97017-1600-27-2	DDR4-2666	16 GByte	no	-40 °C to +85 °C
97017-8192-27-2	DDR4-2666	8 GByte	no	-40 °C to +85 °C
97017-4096-27-2	DDR4-2666	4 GByte	no	-40 °C to +85 °C
97018-3200-27-0	DDR4-2666	32 GByte	yes	0 °C to +60 °C
97018-1600-27-0	DDR4-2666	16 GByte	yes	0 °C to +60 °C
97018-8192-27-0	DDR4-2666	8 GByte	yes	0 °C to +60 °C
97018-4096-27-0	DDR4-2666	4 GByte	yes	0 °C to +60 °C
97018-3200-27-2	DDR4-2666	32 GByte	yes	-40 °C to +85 °C
97018-1600-27-2	DDR4-2666	16 GByte	yes	-40 °C to +85 °C
97018-8192-27-2	DDR4-2666	8 GByte	yes	-40 °C to +85 °C
97018-4096-27-2	DDR4-2666	4 GByte	yes	-40 °C to +85 °C

contact@steliau.fr
steliau.fr
6 rue des Gémeaux, 94150, Rungis

STELIAU
TECHNOLOGY - FRANCE

Copyright © 2022 Kontron. All rights reserved. All data is for information purposes only and not guaranteed for legal purposes. Information has been carefully checked and is believed to be accurate; however, no responsibility is assumed for inaccuracies. Kontron and the Kontron logo and all other trademarks or registered trademarks are the property of their respective owners and are recognized. Specifications are subject to change without notice. COMe-bCL6 (R E2S)-20220221 - WMH