Circuit Breaker for Equipment thermal, Rocker actuation, 1-/2-pole

new

See below:
Approvals and Compliances

Description
- Thermal circuit breaker
- 1-/2 pole
- Snap-in version
- Positively trip-free release
- Method of operation acc. to IEC: S-type
- Different rocker and flange colours
- Wide current range

Unique Selling Proposition
- Magnetic Release for short-circuit protection
- Finely graded rated currents
- High configurability (rocker colours, lettering)
- Appealing design

Applications
- Power tools
- Medical and laboratory equipment
- Industrial appliances
- Equipment for construction
- Cleaning equipment
- Commercial and household kitchen appliances
- Industrial Power
- Industrial lighting arrays

References

Weblinks
pdf data sheet, html datasheet, General Product Information, Distributor-Stock-Check, Detailed request for product, Product News

Technical Data

Rated Voltage AC	IEC: 240 VAC
	UL/CSA : 277 VAC
Rated Voltage DC	1-pole: 32 VDC / 2-pole: 60 VDC
Rated current range AC	0.05 - 20 A / Magnetic up to 16 A
Conditional short circuit capacity Inc	IEC 60934: 0.05...20 A: 2 kA, SC (C1) @ 240 VAC
Degree of Protection	front side IP40 acc. to IEC 60529
Dielectric Strength	50 Hz: > 2.5 kV Impulse 1.2/50 µs: > 4 kV
Insulation Resistance	500 VDC > 100 MΩ
Lifetime	mechanical: 1-/2-pole: 50'000 switching cycles
	AC: 1 x Ir, cos φ 0.6: 1-pole: 30'000 / 2-pole: 50'000 switching cycles
	DC: 1 x Ir, L/R = 2 - 3 ms: 1-/2-pole: 50'000 switching cycles

Overload	(AC) IEC: min. 40 trips @ 6 x Ir, cos φ 0.6
	(AC) UL / CSA: min. 50 trips @ 1.5 x Ir, cos φ 0.75
	(DC) IEC : min. 40 trips @ 4 x Ir , (L/R=2..3ms)
	(DC) UL / CSA : min. 50 trips @ 1.5 x Ir , (t.c.=non.ind.)
Allowable Operation Temp.	-30 °C to 60 °C
Storage Temperature	-40 °C to 60 °C
Vibration Resistance	± 0.75 mm @ 10 - 60 Hz acc. to IEC 60068-2-6, test Tc 10 G @ 60 - 500 Hz acc. to IEC 60068-2-6, test Tc
Shock Resistance	30 G / 18 ms acc. to IEC 60068-2-27, test Ea
Tripping Type	Thermal
Possible Tripping Types	Thermal-Magnetic
Actuation Type	Rocker
Weight	1-pole 19 g - 2-pole 32 - 2-pole (magnetic) 56 g

Approvals and Compliances

Detailed information on product approvals, code requirements, usage instructions and detailed test conditions can be looked up in Details about Approvals

SCHURTER products are designed for use in industrial environments. They have approvals from independent testing bodies according to national and international standards. Products with specific characteristics and requirements such as required in the automotive sector according to IATF 16949, medical technology according to ISO 13485 or in the aerospace industry can be offered exclusively with customer-specific, individual agreements by SCHURTER.

Approvals

The approval mark is used by the testing authorities to certify compliance with the safety requirements placed on electronic products.

Approval Reference Type: TA36

Approval Logo	Certificates	Certification Body	Description
	VDE Approvals	VDE	VDE Certificate Number: 40019754
	UL Approvals	UL	UR File Number: E71572

Product standards

Product standards that are referenced

Organization	Design	Standard	Description
	Designed according to	IEC 60934	Circuit-breakers for equipment (CBE)
	Designed according to	UL 1077	Standard for Supplementary Protectors for Use in Electrical Equipment
	Designed according to	CSA C22.2 No. 235	Supplementary Protectors

Application standards

Application standards where the product can be used

Organization	Design	Standard	Description
	Suitable for applications acc.	IEC/UL 62368-1	Audio/video, information and communication technology equipment - Part 1: Safety requirements

Compliances

The product complies with following Guide Lines

Identification	Details	Initiator	Description
	CE declaration of conformity	SCHURTER AG	The CE marking declares that the product complies with the applicable requirements laid down in the harmonisation of Community legislation on its affixing in accordance with EU Regulation 765/2008.
	UKCA declaration of conformity	SCHURTER AG	The UKCA marking declares that the product complies with the applicable requirements laid down in the British Amendment of Regulation (EC) 765/2008.
	RoHS	SCHURTER AG	Directive RoHS 2011/65/EU, Amendment (EU) 2015/863
	China RoHS	SCHURTER AG	The law SJ / T 11363-2006 (China RoHS) has been in force since 1 March 2007. It is similar to the EU directive RoHS.
	REACH	SCHURTER AG	On 1 June 2007, Regulation (EC) No 1907/2006 on the Registration, Evaluation, Authorization and Restriction of Chemicals 1 (abbreviated as "REACH") entered into force.

Dimension [mm]

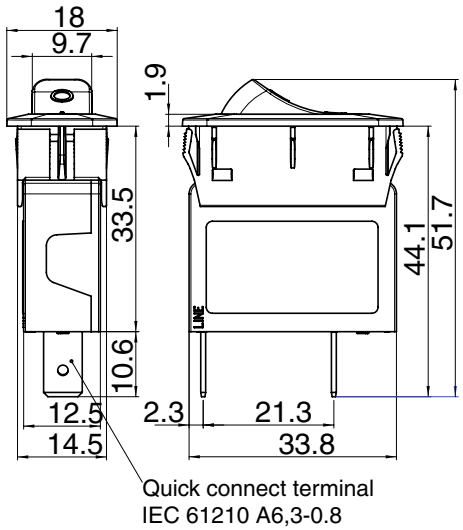

1-pole

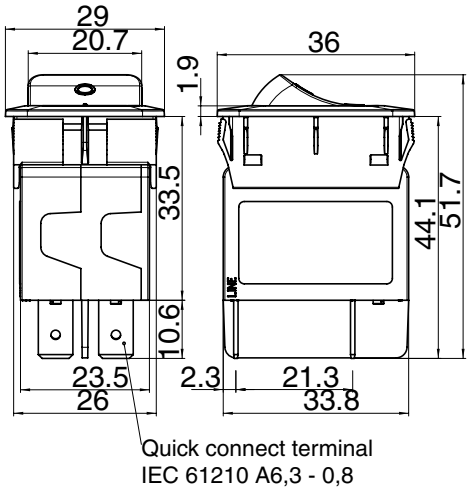

2-pole

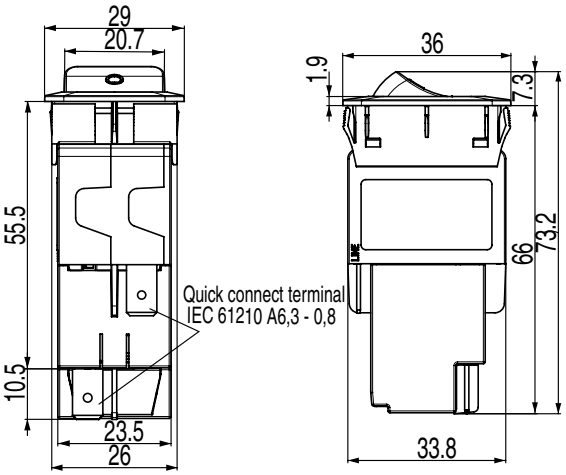

1-pole magnetic protected

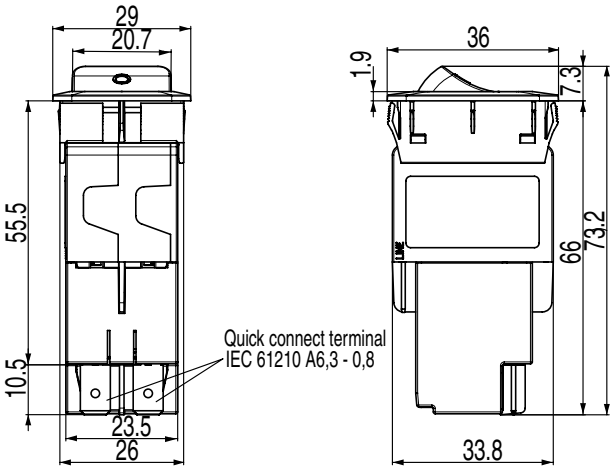

2-pole magnetic protected

Panel cut-out

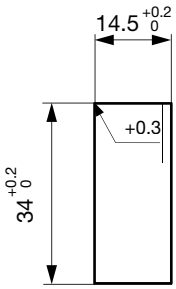

Panel 1.0 – 3.5 mm

Panel cut-out
2 Pole

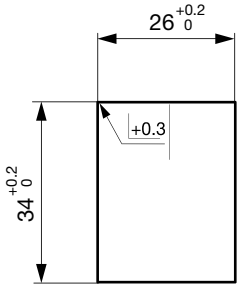

Panel 1.0 – 3.5 mm

Diagrams

1-pole, 1 bimetal, non illuminated

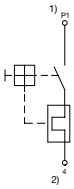

1) Line, 2) Load
Codepos AAA = CFT, CGT

2-pole, 1 bimetal, non illuminated

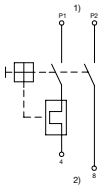

1) Line, 2) Load

2-pole, 2 bimetal, non illuminated

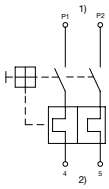

1) Line, 2) Load

Approval		Rated current	Rated Voltage AC	Rated Voltage DC
	UL 1077	0.05...20 A	277 V	32/60 V
	CSA C22.2 235	0.05...20 A	277 V	32/60 V
	IEC 60934	0.05...20 A	240 V	32/60 V

Typical internal resistance per pole

Rated Current [A]	Internal Resistance [Ω]
0.05	200.0000
0.1	70.0000
0.2	18.8000
0.3	8.6500
0.4	4.4000
0.5	2.7500
0.8	0.9100
1.0	0.7200
1.2	0.5000
1.5	0.3400
2.0	0.1870
2.5	0.1150
3.0	0.0590
3.5	0.0590
4.0	0.0590
5.0	0.0440
6.0	0.0280
7.0	0.0142
8.0	0.0142
10.0	0.0109
12.0	0.0086
13.0	0.0072
14.0	0.0072
15.0	0.0056
16.0	0.0056
18.0	0.0052
20.0	0.0052

Time-Current-Curves

Tripping Characteristics thermal I_n < 3 A

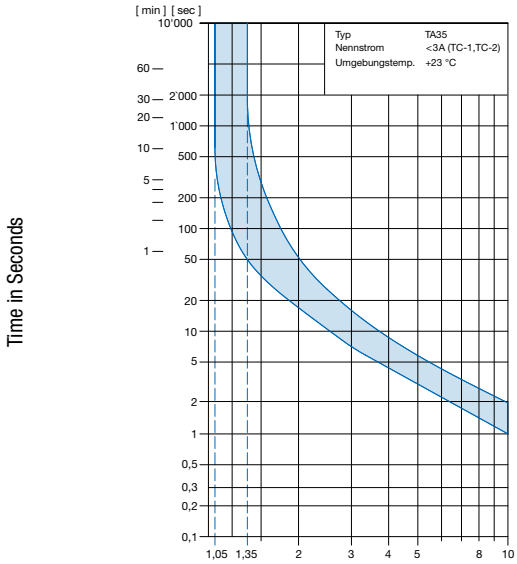

Multiple of Rated Current In

Ambient temperature +23°

Tripping Characteristics thermal In ≥ 3 ... ≤ 15 A

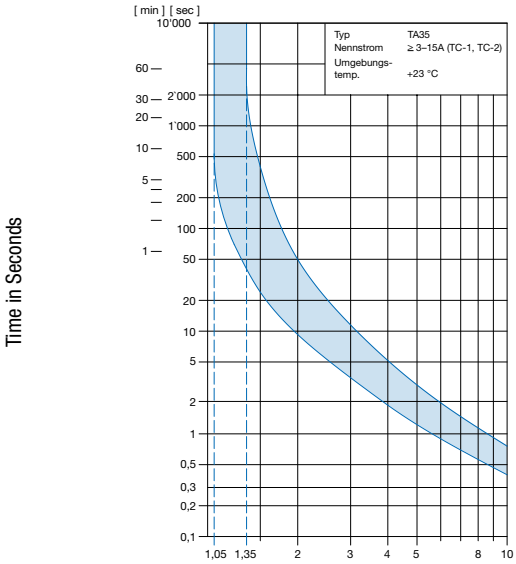

Multiple of Rated Current In

Ambient temperature +23°

Tripping Characteristics thermal magnetic time lag

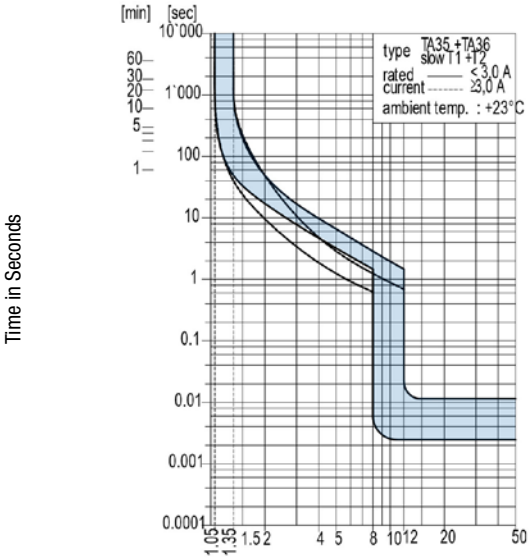

Ambient temperature +23°

Tripping Characteristics thermal magnetic fast acting

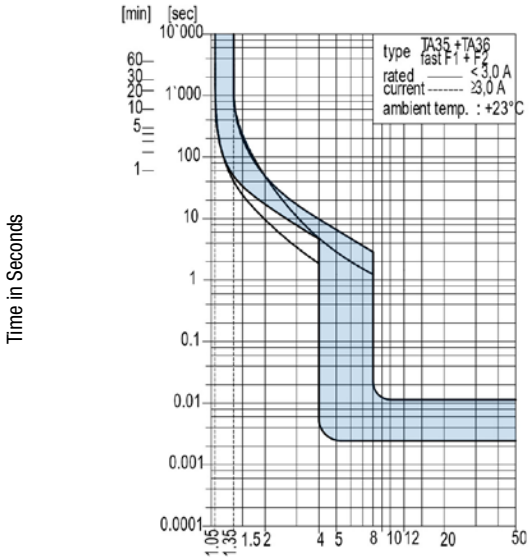

Ambient temperature +23°

Effect of ambient temperature

The units are calibrated for an ambient temperature of +23°C. To determine the rated current for a lower or higher ambient temperature, use a correction factor (typical value) from the table below:

Ambient Temperature [°C]	Correction factor	
	1-pole	2-pole
-30	0.77	0.76
-20	0.81	0.81
0	0.90	0.90
+23	1.00	1.00
+40	1.03	1.03
+50	1.04	1.04
+60	1.06	1.06

Example: Rated current = 5 A, Environmental temperature = 50 °C --> Correction factor = 1.04, Resulting current = 5.2 A --> Round to next higher rated current: 6 A

Order number key

T	A	3	6	-	R	S	1	4	F	Q	1	0	0	W	B	F	W	Z	0	5	T	2	0	-	0	0	0
					1	2	3	4	5	6	7	8	9	10	11	12	13	14			15						

Actuation type			1
Rocker	=	R	

Mounting			2
Snap in	=	S	

Poles			3
1-pole	=	1	
2-pole	=	2	

IP protection			4
IP40	=	4	

Switch type			5
ON/OFF	=	F	
Momentary Switch	=	M	

Connector			6
Quick connector	=	Q	

Overload protection			7
1-pole protected	=	1	
2-pole protected	=	2	

Illumination voltage			8
n/a	=	0	

Illumination color			9
n/a	=	0	

Front bezel			10
black	=	B	
white	=	W	
grey	=	G	

Rocker			11
black	=	B	
white	=	W	
red	=	R	
green	=	G	
yellow	=	Y	
orange	=	A	
blue	=	L	

Marking			12
Not marked*	=	N	
*(*marking to be applied by the customer)*			
– O	=	H	
ON OFF	=	F	

Marking color			13
nothing	=	N	
black	=	B	
white	=	W	
embossed	=	E	

Rated current terminal overload protection 14

In			In		
0.05 A	=	Z05	3.0 A	=	030
0.1 A	=	J01	3.5 A	=	035
0.15 A	=	Z15	4.0 A	=	040
0.2 A	=	J02	5.0 A	=	050
0.25 A	=	Z25	6.0 A	=	060
0.3 A	=	J03	7.0 A	=	070
0.35 A	=	Z35	8.0 A	=	080
0.4 A	=	J04	10.0 A	=	100
0.45 A	=	Z45	12.0 A	=	120
0.5 A	=	J05	13.0 A	=	130
0.8 A	=	J08	14.0 A	=	140
1.0 A	=	J10	15.0 A	=	150
1.2 A	=	J12	16.0 A	=	160
1.5 A	=	J15	18.0 A	=	180
2.0 A	=	J20	20.0 A	=	200
2.5 A	=	J25			

(additional current ratings on request)

Characteristic Magnetic Release			15
Standard (no other features)	=	00	
1-pole, time lag	=	T1	
2-poles, time lag	=	T2	
1-pole, fast acting	=	F1	
2-poles, fast acting	=	F2	

All Variants

Basic function	Rocker	Marking	Front bezel	Rated Current [A]	Config. Code	Order Number
1 pole, 1 bimetal	white	I/O; embossed	black	20	TA36-RS14FQ100BWHE200000-000	3-125-263
1 pole, 1 bimetal	white	I/O; embossed	grey	20	TA36-RS14FQ100GWHE200000-000	3-128-204
1 pole, 1 bimetal	green	I/O; embossed	black	20	TA36-RS14FQ100BGHE200000-000	3-128-208
1 pole, 1 bimetal	black	ON/OFF; white	black	16	TA36-RS14FQ100BBFW160000-000	3-128-211
1 pole, 1 bimetal	black	I/O; white	black	16	TA36-RS14FQ100BBHW160000-000	3-128-212
1 pole, 1 bimetal	black	I/O; embossed	black	10	TA36-RS14FQ100BBHE100000-000	3-128-197
1 pole, 1 bimetal	yellow	I/O; black	black	10	TA36-RS14FQ100BYHB100000-000	3-128-198
1 pole, 1 bimetal	black	I/O; embossed	black	6	TA36-RS14FQ100BBHE060000-000	3-128-199
1 pole, 1 bimetal	green	ON/OFF; white	white	5	TA36-RS14FQ100WGFW050000-000	3-128-213
1 pole, 1 bimetal	red	I/O; black	black	5	TA36-RS14FQ100BRHB050000-000	3-128-200
1 pole, 1 bimetal	white	I/O; embossed	black	3	TA36-RS14FQ100BWHE030000-000	3-128-201
2 pole, 2 bimetal	black	I/O; white	black	20	TA36-RS24FQ200BBHW200000-000	3-128-214
2 pole, 2 bimetal	black	I/O; white	grey	20	TA36-RS24FQ200GBHW200000-000	3-128-215
2 pole, 2 bimetal	green	I/O; embossed	black	20	TA36-RS24FQ200BGHE200000-000	3-128-216
2 pole, 2 bimetal	white	I/O; black	black	20	TA36-RS24FQ200BWHB200000-000	3-128-240
2 pole, 2 bimetal	black	ON/OFF; white	black	16	TA36-RS24FQ200BBFW160000-000	3-128-230
2 pole, 2 bimetal	black	I/O; white	black	16	TA36-RS24FQ200BBHW160000-000	3-128-231
2 pole, 2 bimetal	white	I/O; embossed	black	15	TA36-RS24FQ200BWHE150000-000	3-128-217
2 pole, 2 bimetal	white	I/O; black	black	15	TA36-RS24FQ200BWHB150000-000	3-128-218
2 pole, 2 bimetal	black	I/O; white	black	10	TA36-RS24FQ200BBHW100000-000	3-128-327
2 pole, 2 bimetal	black	I/O; embossed	black	10	TA36-RS24FQ200BBHE100000-000	3-128-232
2 pole, 2 bimetal	white	I/O; embossed	black	10	TA36-RS24FQ200BWHE100000-000	3-128-233
2 pole, 2 bimetal	green	I/O; white	white	10	TA36-RS24FQ200BGHW100000-000	3-128-234
2 pole, 2 bimetal	black	I/O; white	white	10	TA36-RS24FQ200WBHW100000-000	3-128-235
2 pole, 2 bimetal	white	I/O; black	white	10	TA36-RS24FQ200WWHB100000-000	3-128-219
2 pole, 2 bimetal	white	I/O; embossed	black	6	TA36-RS24FQ200BWHE060000-000	3-128-236
2 pole, 2 bimetal	white	I/O; embossed	black	5	TA36-RS24FQ200BWHE050000-000	3-128-221
2 pole, 2 bimetal	green	I/O; embossed	black	3	TA36-RS24FQ200BGHE030000-000	3-128-238
2 pole, 2 bimetal	black	I/O; embossed	black	3	TA36-RS24FQ200BBHE030000-000	3-128-239
2 pole, 2 bimetal	black	I/O; white	black	3	TA36-RS24FQ200BBHW030000-000	3-128-243
2 pole, 2 bimetal	white	I/O; black	black	3	TA36-RS24FQ200BWHB030000-000	3-128-244

Availability for all products can be searched real-time: https://www.schurter.com/en/info-center/support-tools/stock-check-distributors

Packaging Unit

1-pole	20 pcs.
2-pole	10 pcs.

28.08.2024

The specifications, descriptions and illustrations indicated in this document are based on current information. All content is subject to modifications and amendments. Information furnished is believed to be accurate and reliable. However, users should independently evaluate the suitability and test each product selected for their own applications.