TAOGLAS

Datasheet

Inception Series Low Profile Multi-Band GNSS Patch

Part No:
HP5354.A

Description

Low Profile Multi-Band GNSS L1/L5 Patch Antenna

Features:

Compact 4mm high Innovative 35x35mm GNSS Patch Antenna
Bands Covered:
- BeiDou (B1/B2a)
- GPS/QZSS (L1/L5)
- GLONASS (G1)
- Galileo (E1/E5a)

Dual feed solder mount configuration
Dimensions: 35 x 35 x 4mm
RoHS & Reach Compliant

1.	Introduction	2
2.	Antenna Characteristics	5
3.	Radiation Patterns	11
4.	Mechanical Drawing	16
5.	Antenna Integration Guide	17
6.	Solder Reflow Profile	25
7.	Packaging	26
	Changelog	28

Taoglas makes no warranties based on the accuracy or completeness of the contents of this document and reserves the right to make changes to specifications and product descriptions at any time without notice. Taoglas reserves all rights to this document and the information contained herein. Reproduction, use or disclosure to third parties without express permission is strictly prohibited.

Ireland ISO 9001: 2015 Certified

Taiwan ISO 9001: 2015 Certified

1. Introduction

The Taoglas **Inception Series HP5354.A**, is a multi-band GNSS passive patch antenna designed for optimum positional accuracy and positioning. It utilizes an innovative ceramic patch within a patch antenna design with optimized gain for GPS L1/L5, Galileo, GLONASS and BeiDou bands and measures just 35*35*4mm.

This ground-breaking design allows customers to integrate a multi-band L1/L5 GNSS patch into devices where this would not have been possible before due to height constraints. At only 4mm in height, the HP5354 can be used in a variety of applications where typical stacked patch designs are too tall.

Typical Applications Include:

- Wearables
- Compact Asset Trackers
- Precision Agriculture
- Navigation
- Industrial Tracking
- Autonomous Vehicles & Robotics

The HP5354.A has been tuned and tested on a 70 x 70mm ground plane and exhibits excellent radiation patterns. The HP5354.A has been optimized to cover the bands required for the next generation of L1/L5 GNSS receivers that are currently on the market.

If you require an easy to integrate active electronic circuit for the HP5354.A, the Taoglas TFM.100B can be designed onto the device PCB alongside the antenna. The module features a SAW/LNA/SAW/LNA topology in both the low and high band signal paths to prevent unwanted out-of-band interference from overdriving the GNSS LNAs or receiver. The SAW filters have been carefully selected and placed to provide excellent out-of-band rejection while also maintaining low noise figure.

Care should be taken when integrating this antenna into a customer device. Patch antennas can be specifically tuned to customer-specific device environments, subject to NRE and MOQ. Contact your regional Taoglas customer support team to request these services or additional support to integrate and test this antenna's performance in your device.

GNSS Frequency Bands					
GPS	L1 1575.42 MHz	L2 1227.6 MHz	L5 1176.45 MHz		
	■	□	■		
GLONASS	G1 1602 MHz	G2 1248 MHz	G3 1207 MHz		
	■	□	□		
Galileo	E1 1575.24 MHz	E5a 1176.45 MHz	E5b 1201.5 MHz	E6 1278.75 MHz	
	■	■	□	□	
BeiDou	B1C 1575.42 MHz	B1I 1561 MHz	B2a 1176.45 MHz	B2b 1207.14 MHz	B3 1268.52 MHz
	■	■	■	□	□
QZSS (Regional)	L1 1575.42 MHz	L2C 1227.6 MHz	L5 1176.45 MHz	L6 1278.75e6	
	■	□	■	□	
IRNSS (Regional)	L5 1176.45 MHz				
	■				
SBAS	L1/E1/B1 1575.42 MHz	L5/B2a/E5a 1176.45 MHz	G1 1602 MHz	G2 1248 MHz	G3 1207 MHz
	■	■	■	□	□

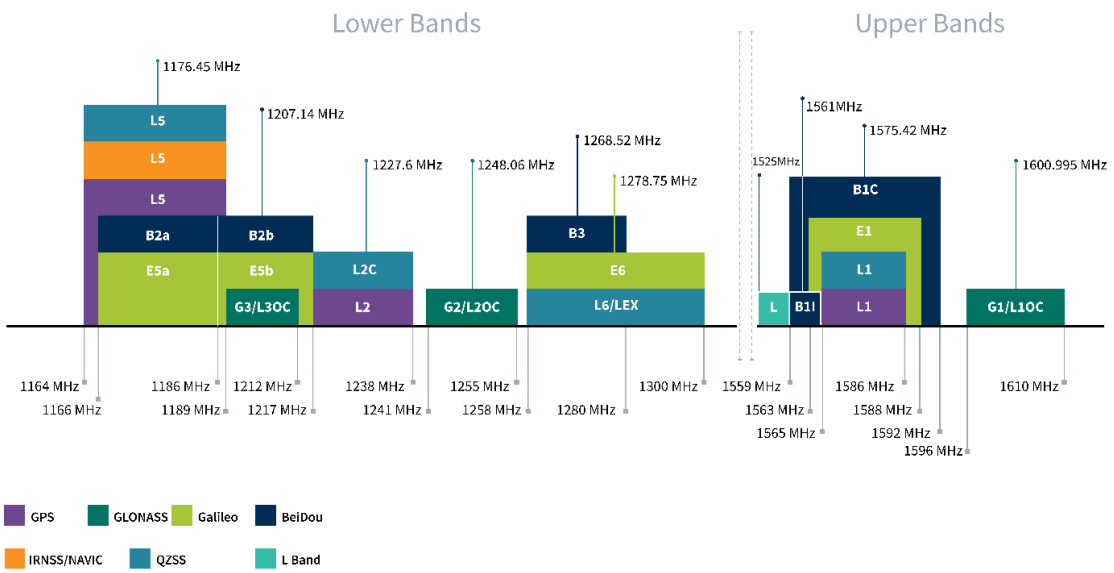

GNSS Bands and Constellations

GNSS Electrical					
Frequency (MHz)	GPS L5	BeiDou_B1	GPS_L1	Galileo_E1	GLONASS_G1
	1164-1189	1559-1592	1565-1586	1563-1588	1596-1610
Efficiency (%)	40.0	50.0	52.6	51.7	39.5
Average Gain(dB)	-3.98	-3.01	-2.79	-2.86	-4.04
Peak Gain (dBi)	2.07	2.61	2.61	2.61	2.06
Axial Ratio (dB)	1.90	1.79	1.79	1.79	1.22
PCO (cm)	1.08	1.42	1.42	1.42	1.37
PCV (cm)	0.02	0.01	0.01	0.01	0.002
Group Delay (ns)	20.47	14.35	14.35	14.35	13.45
Impedance	50 Ω				
Polarization	RHCP				
Radiation Pattern	Directional				
*Tested on 70x70 mm ground plane					

Mechanical	
Dimensions	35 x 35 x 4mm
Weight	16g
Material	Ceramic
Environmental	
Operational Temperature	-40°C to 85°C
Storage Temperature	-40°C to 85°C
Humidity	Non-condensing 65°C 95% RH
Moisture Sensitivity Level (MSL)	3

2. Antenna Characteristics

2.1 Test Set-up

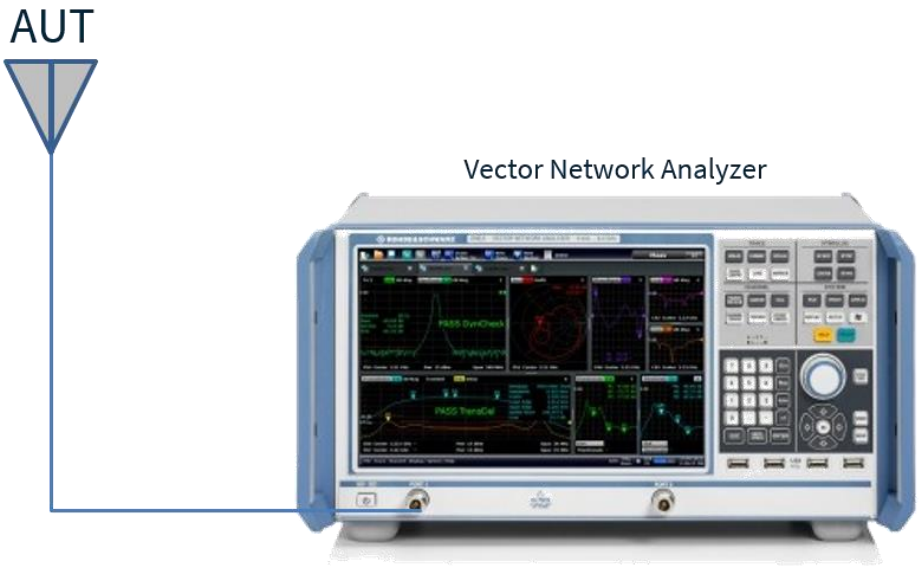

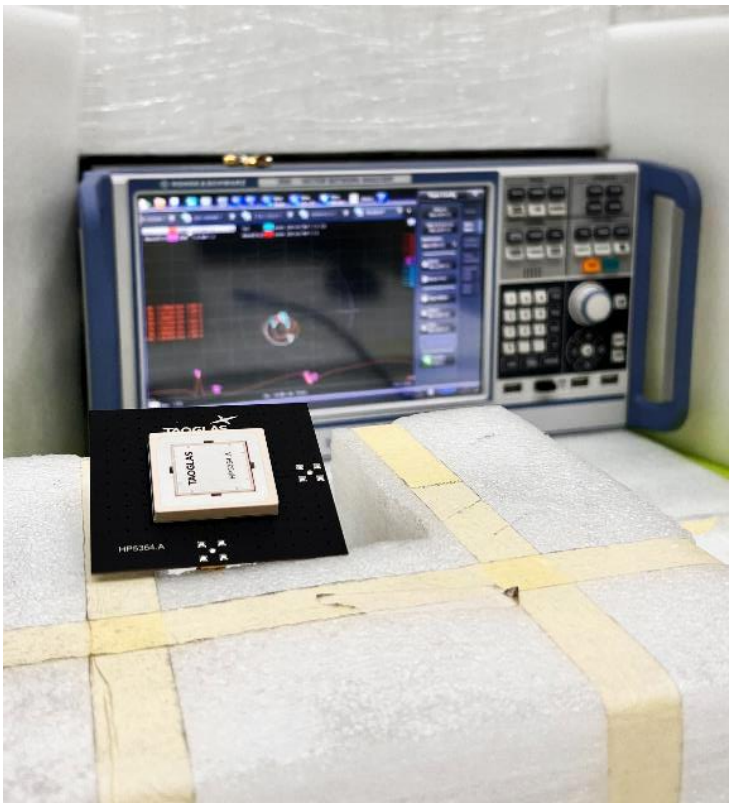

VNA Test Setup on a 70x70mm Ground Plane

2.2 Return Loss

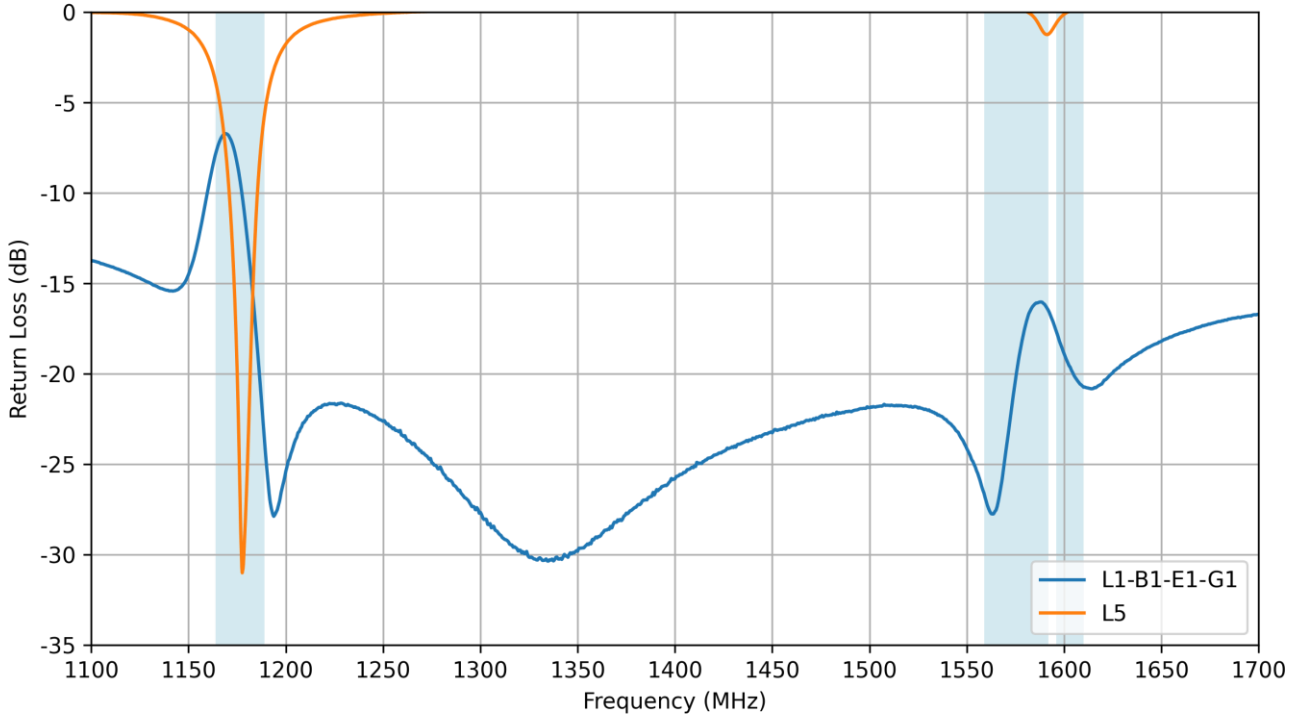

2.3 VSWR

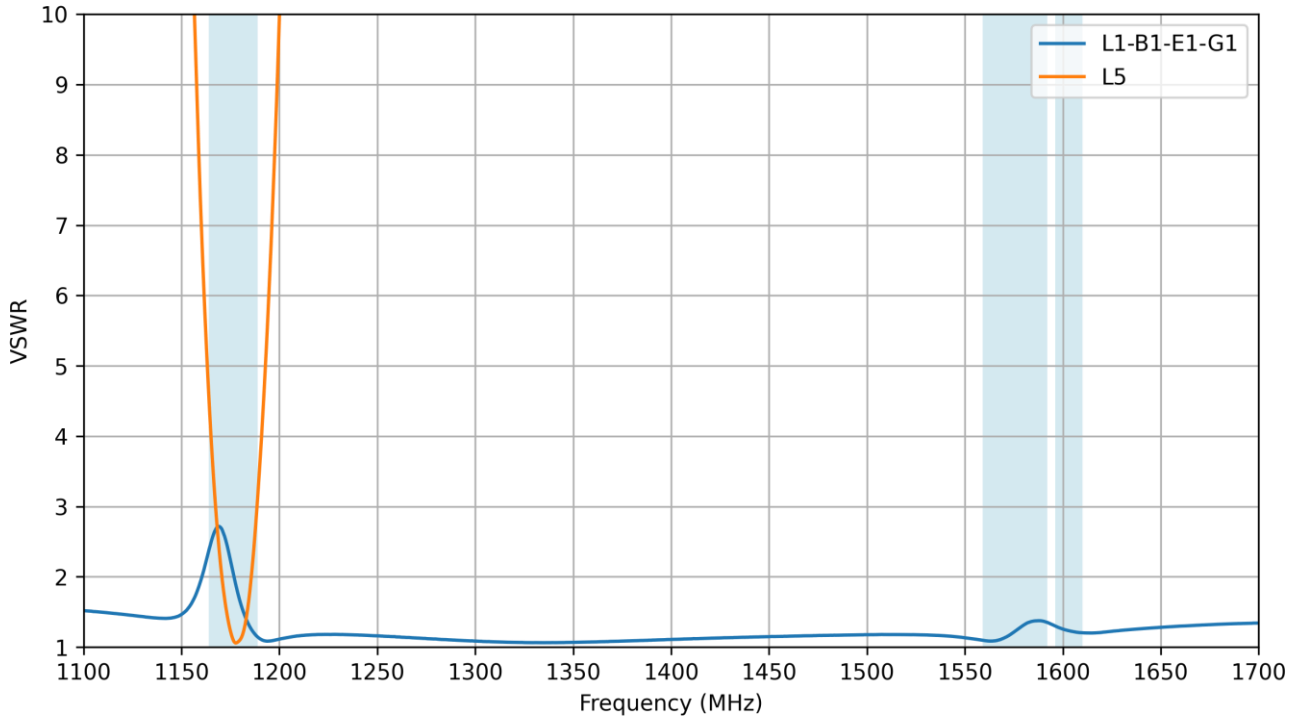

2.4 Efficiency

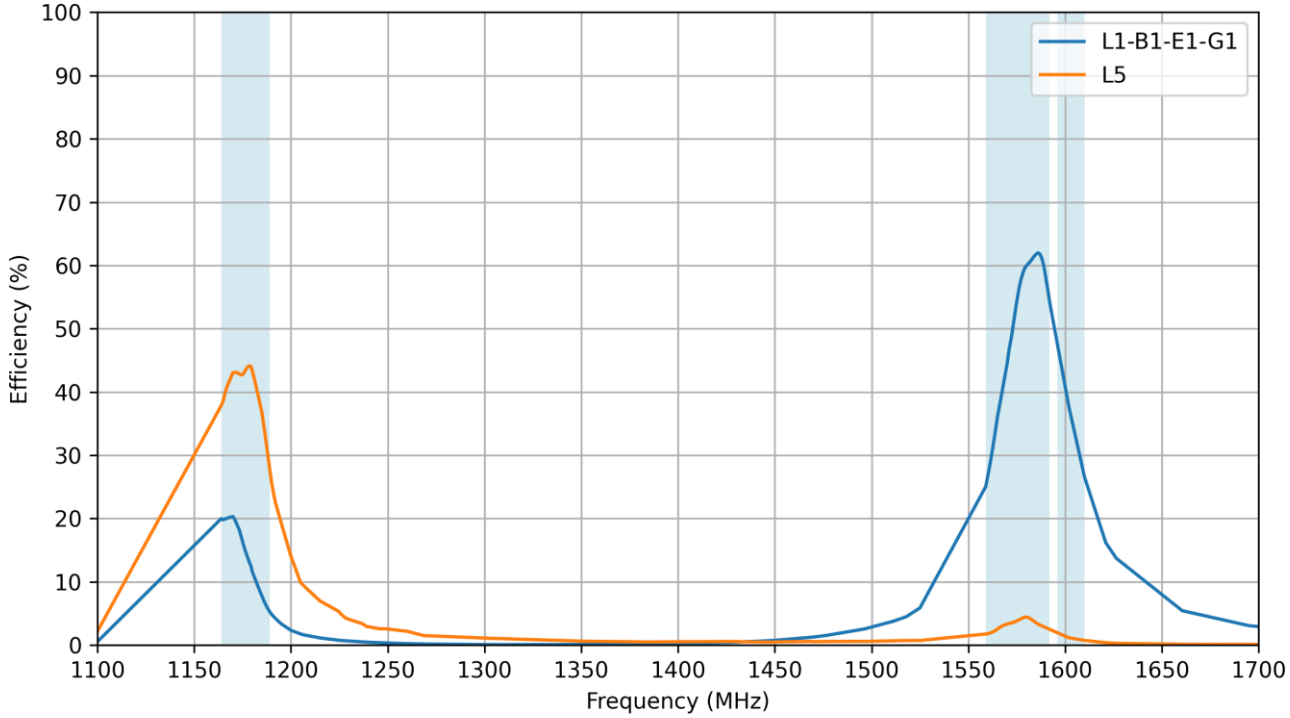

2.5 Average Gain

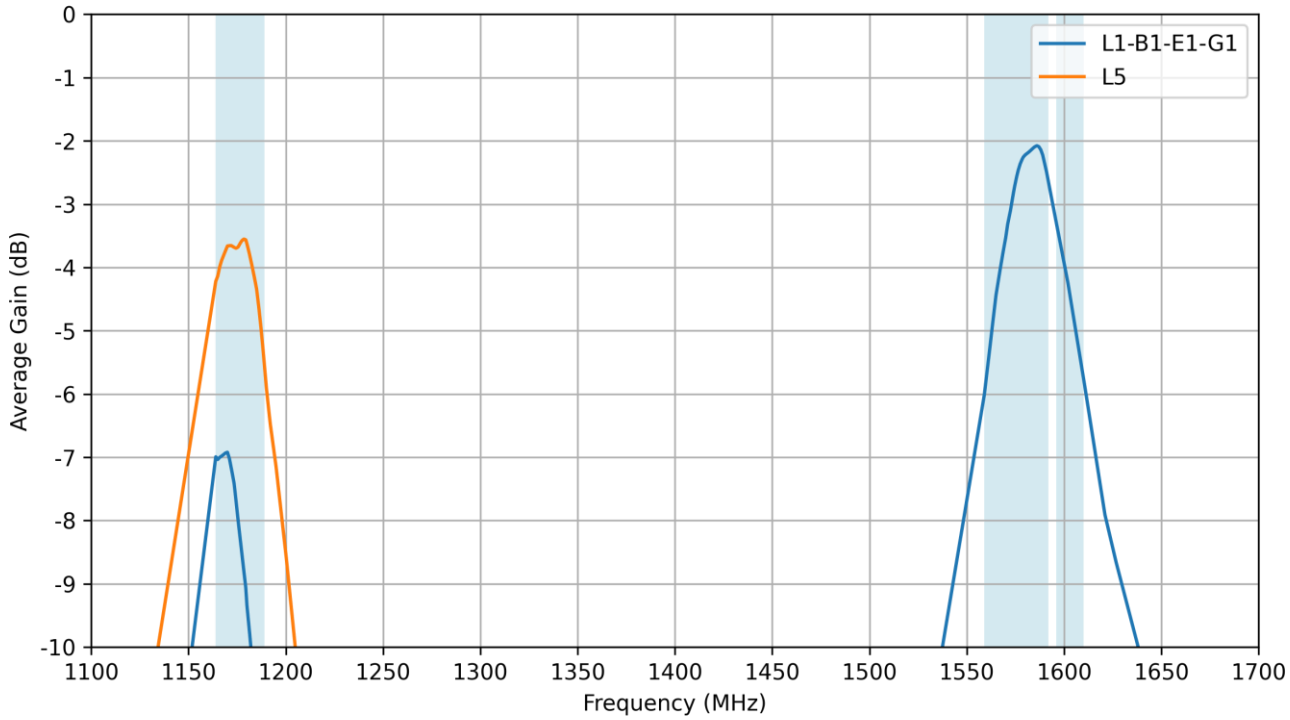

2.6 Peak Gain

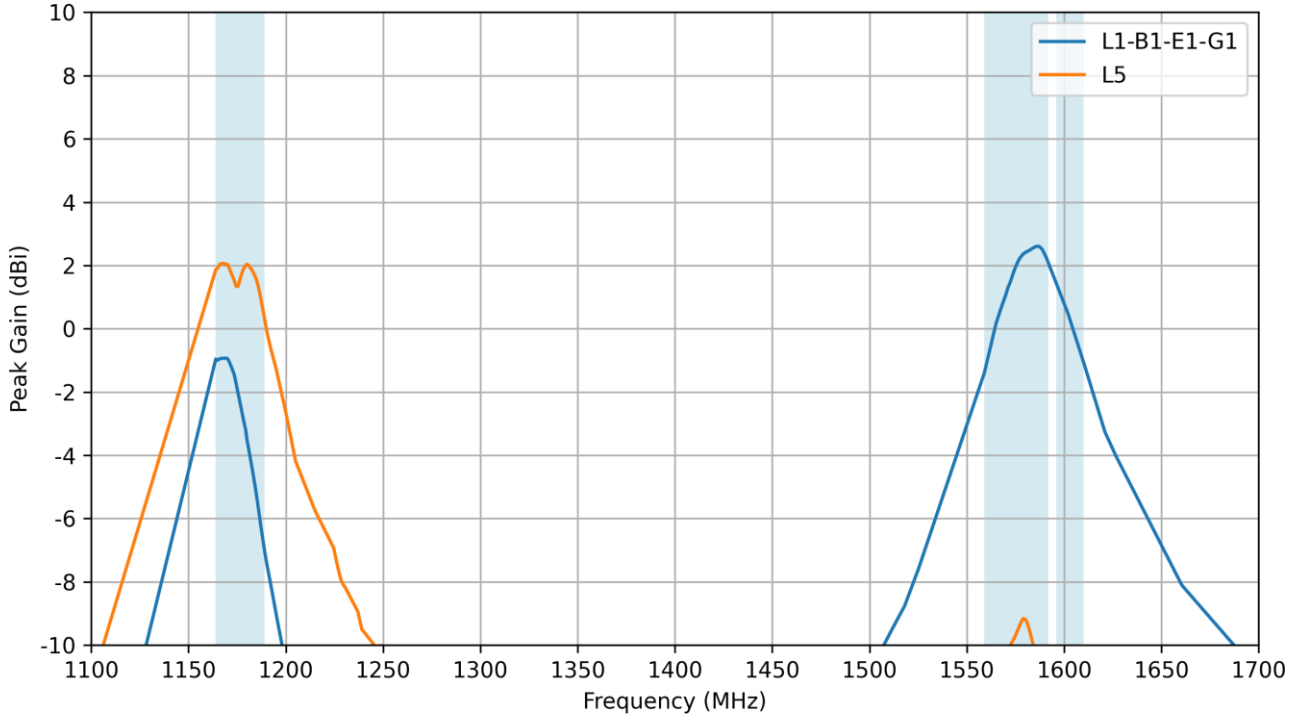

2.7 AR vs Frequency

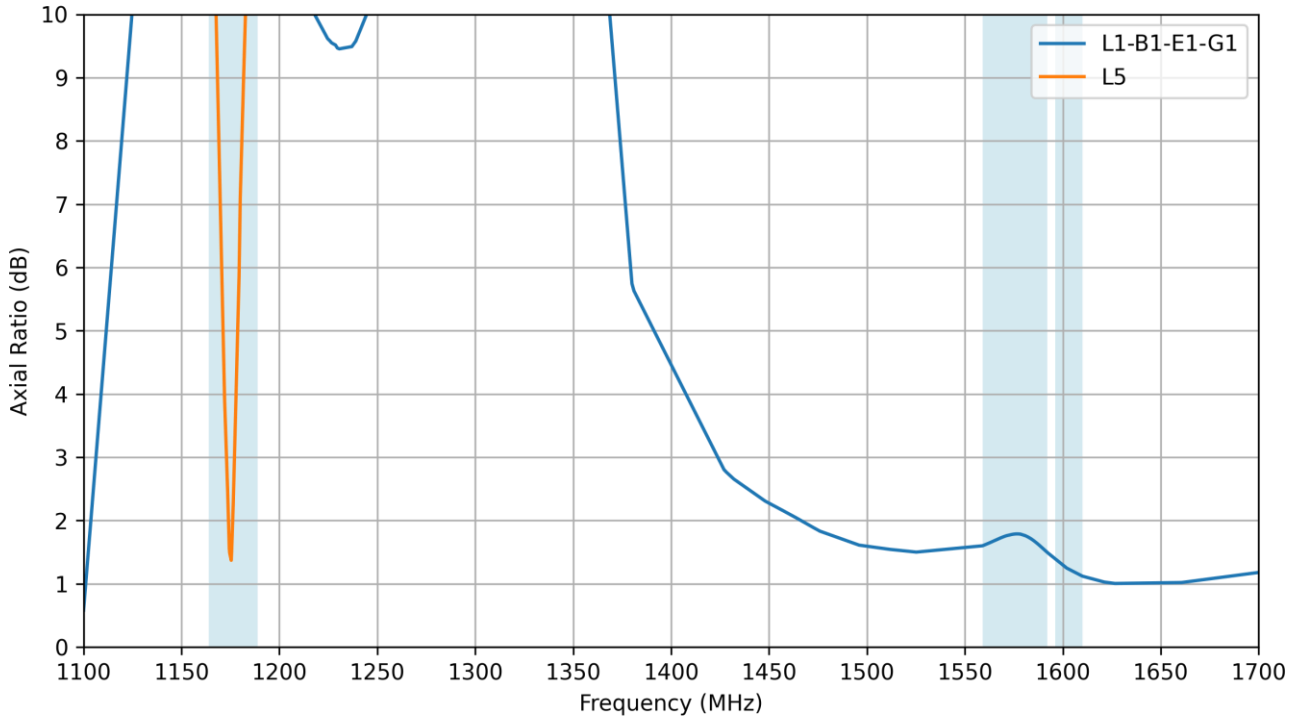

2.8 PCO

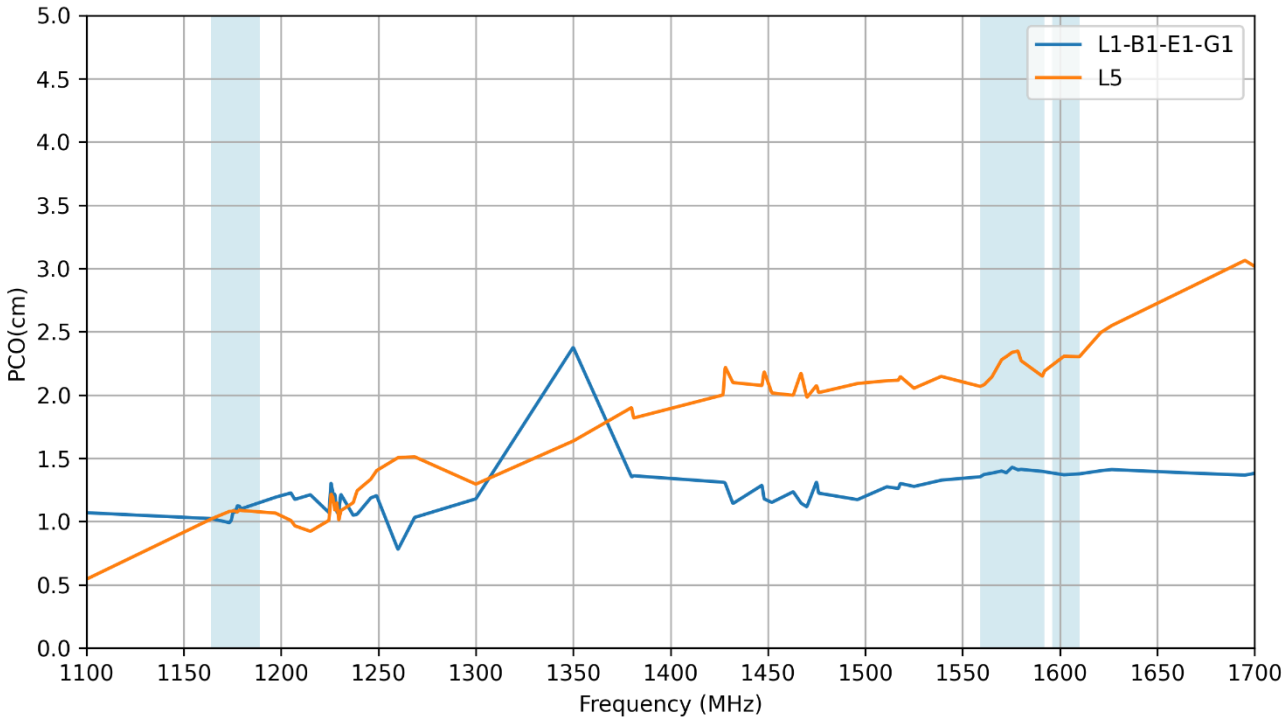
L1-B1-E1-G1
L5
PCO(cm)
Frequency (MHz)
5.0
4.5
4.0
3.5
3.0
2.5
2.0
1.5
1.0
0.5
0.0
1100
1150
1200
1250
1300
1350
1400
1450
1500
1550
1600
1650
1700

2.9 PCV

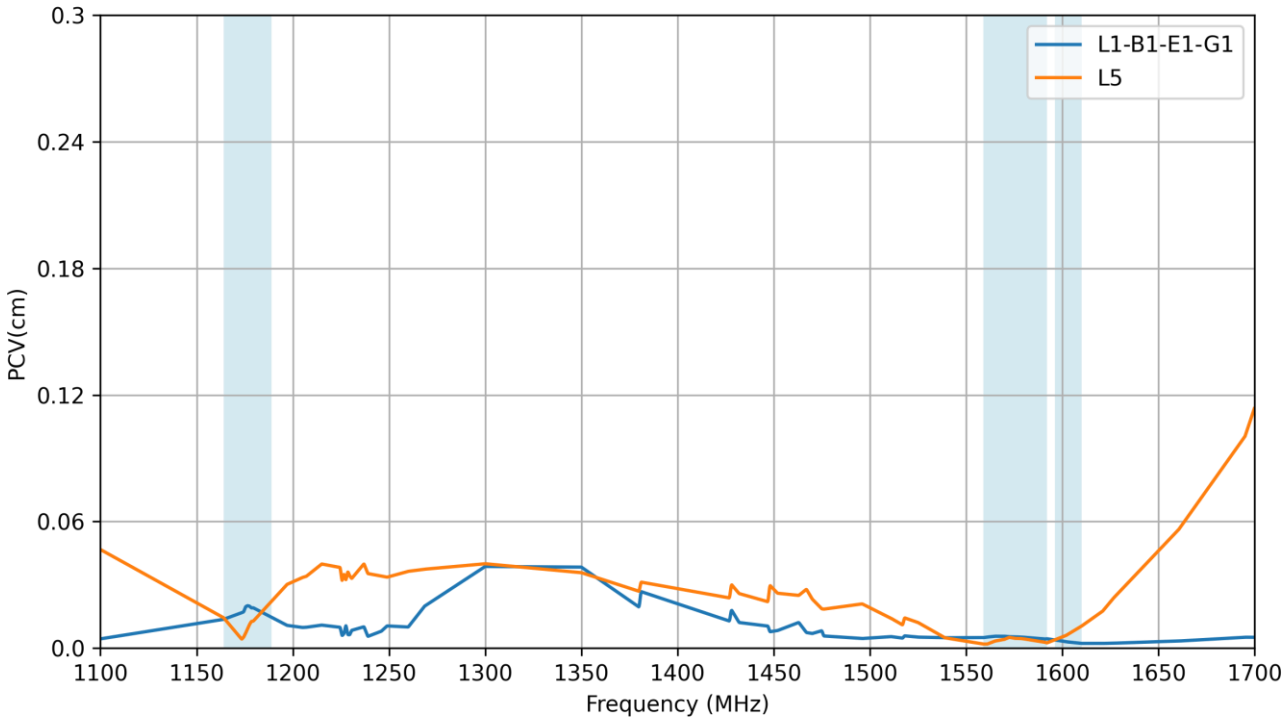
L1-B1-E1-G1
L5
PCV(cm)
Frequency (MHz)
0.3
0.24
0.18
0.12
0.06
0.0
1100
1150
1200
1250
1300
1350
1400
1450
1500
1550
1600
1650
1700

2.10 Group Delay

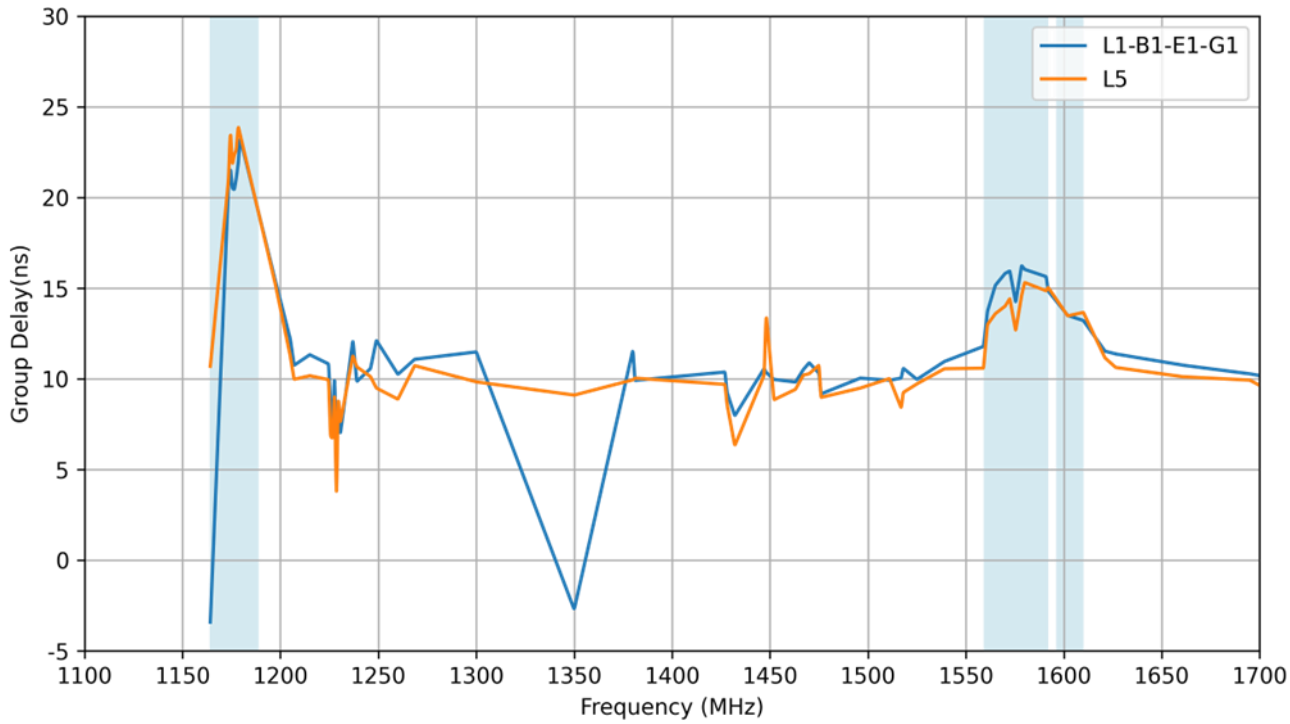

3. Radiation Patterns

3.1 Test Setup

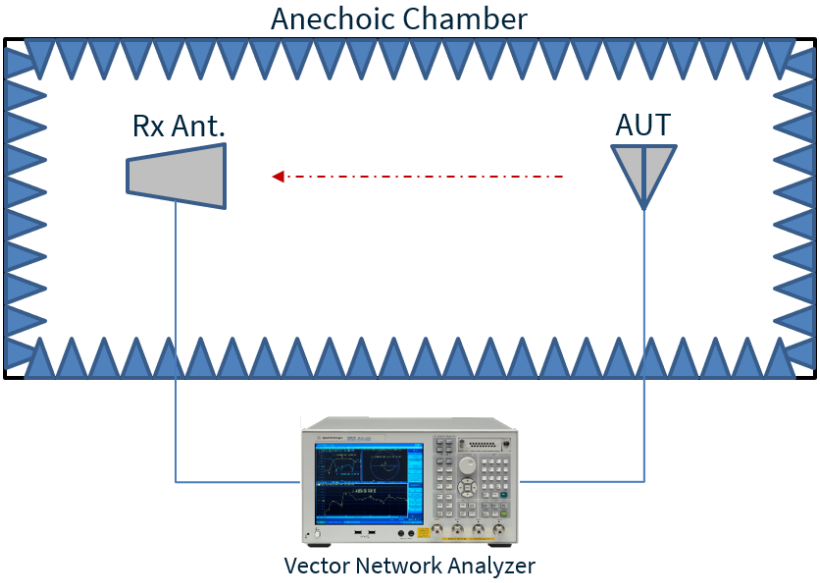

Chamber test setup on 70x70mm ground plane

3.2 Patterns at 1176 MHz

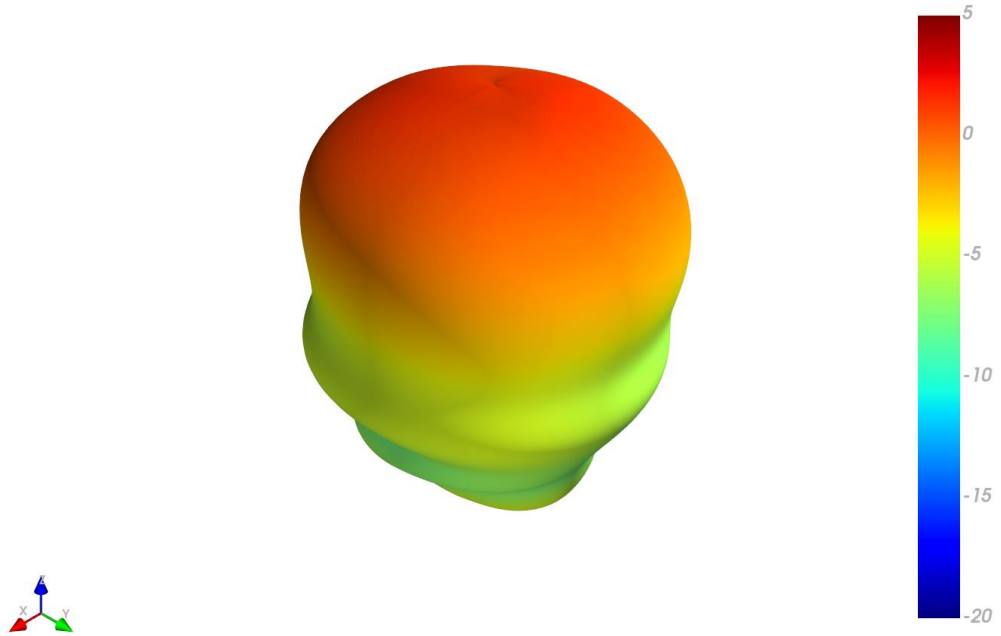

XZ Plane	YZ Plane	XY Plane

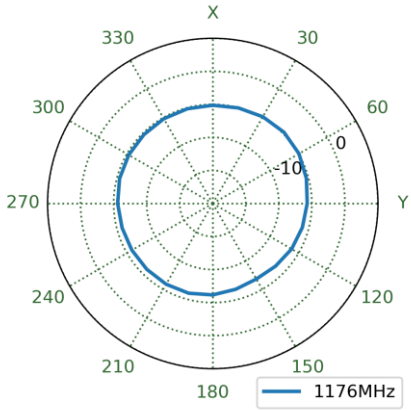

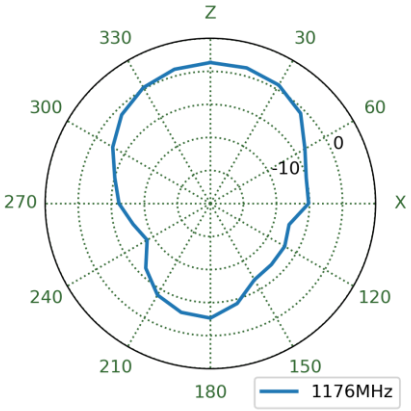

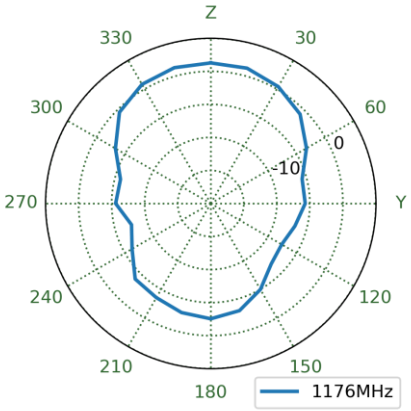

3.3 Patterns at 1561 MHz

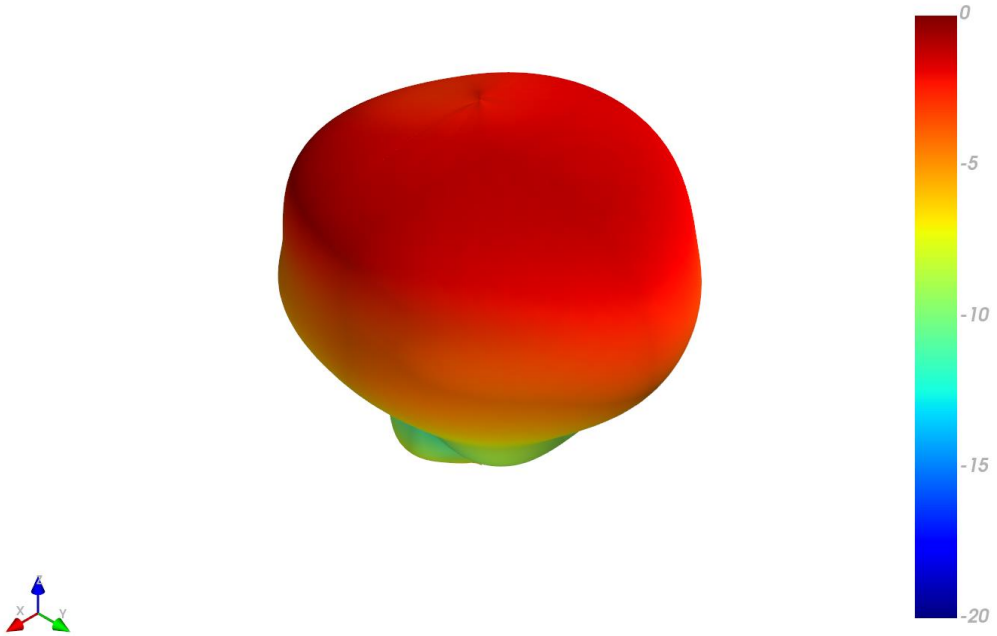

XZ Plane	YZ Plane	XY Plane

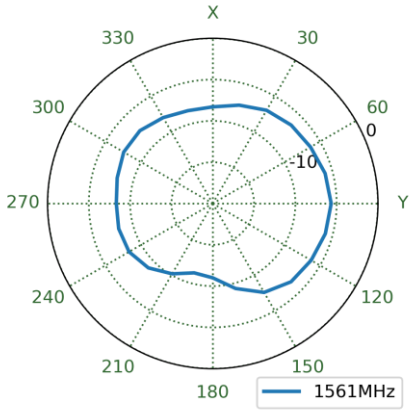

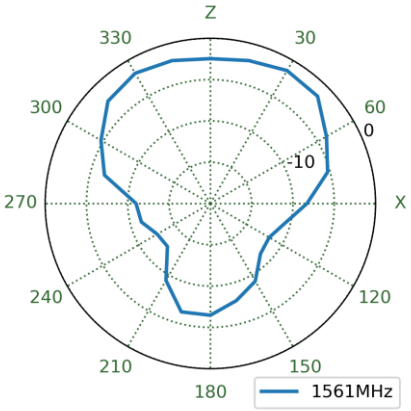

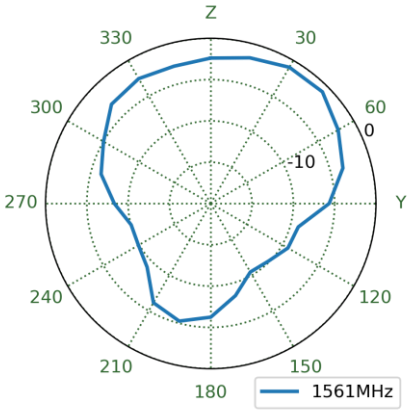

3.4 Patterns at 1575 MHz

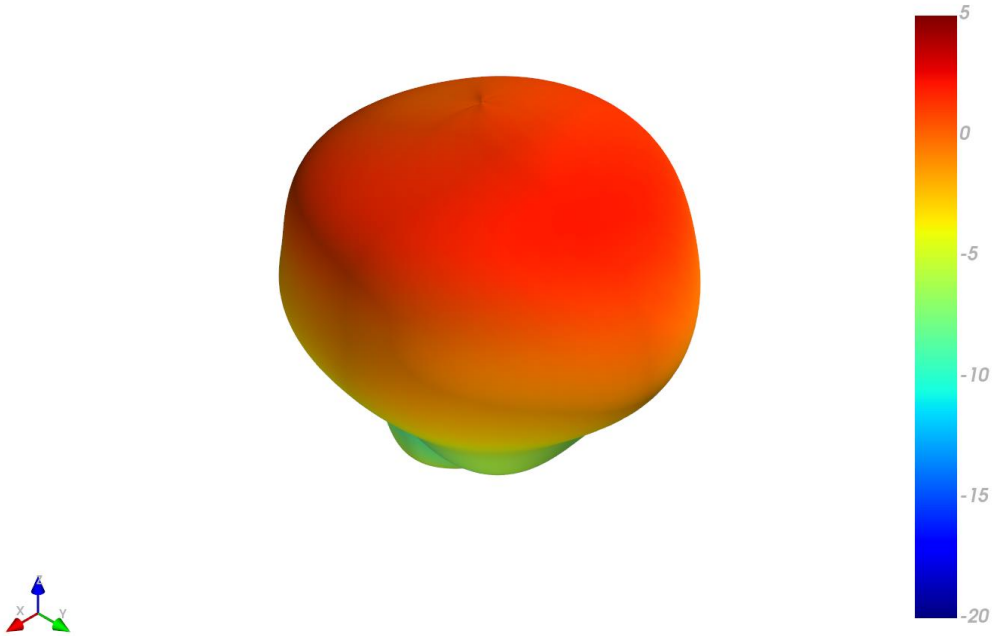

XZ Plane	YZ Plane	XY Plane

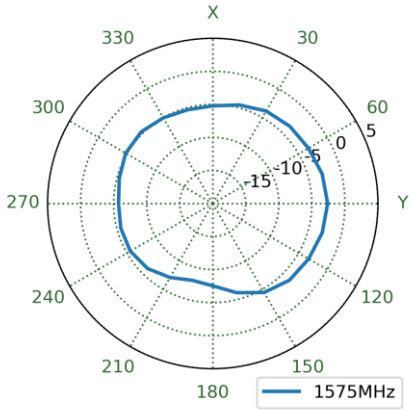

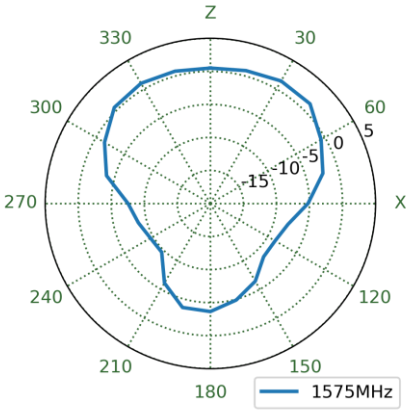

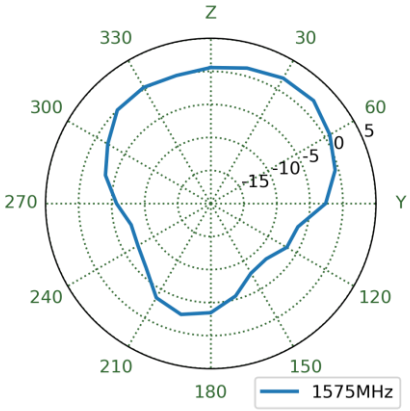

3.5 Patterns at 1602 MHz

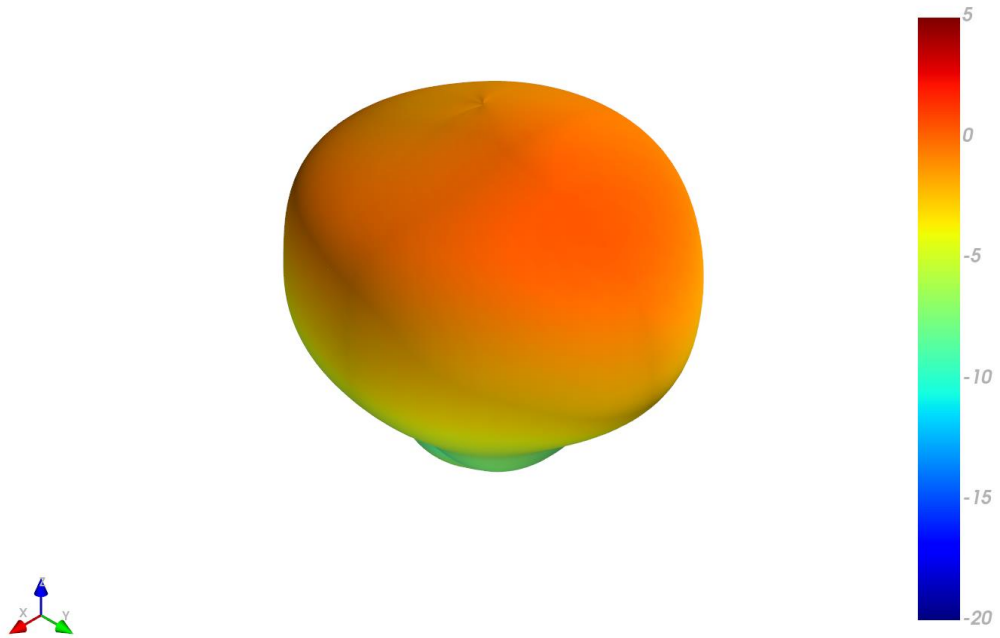

XZ Plane	YZ Plane	XY Plane

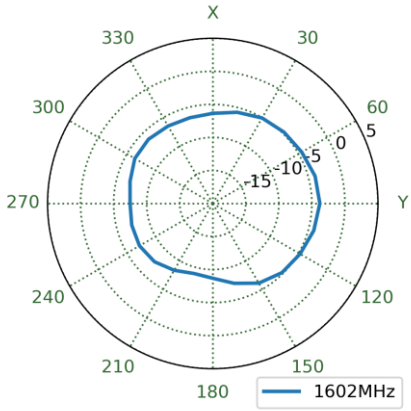

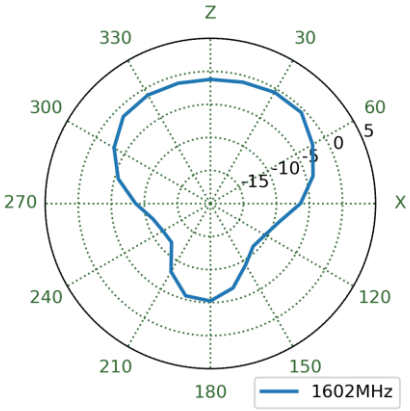

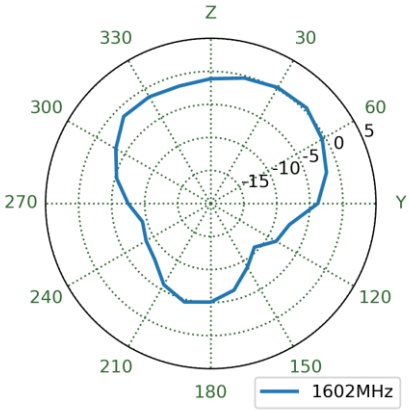

4. Mechanical Drawing

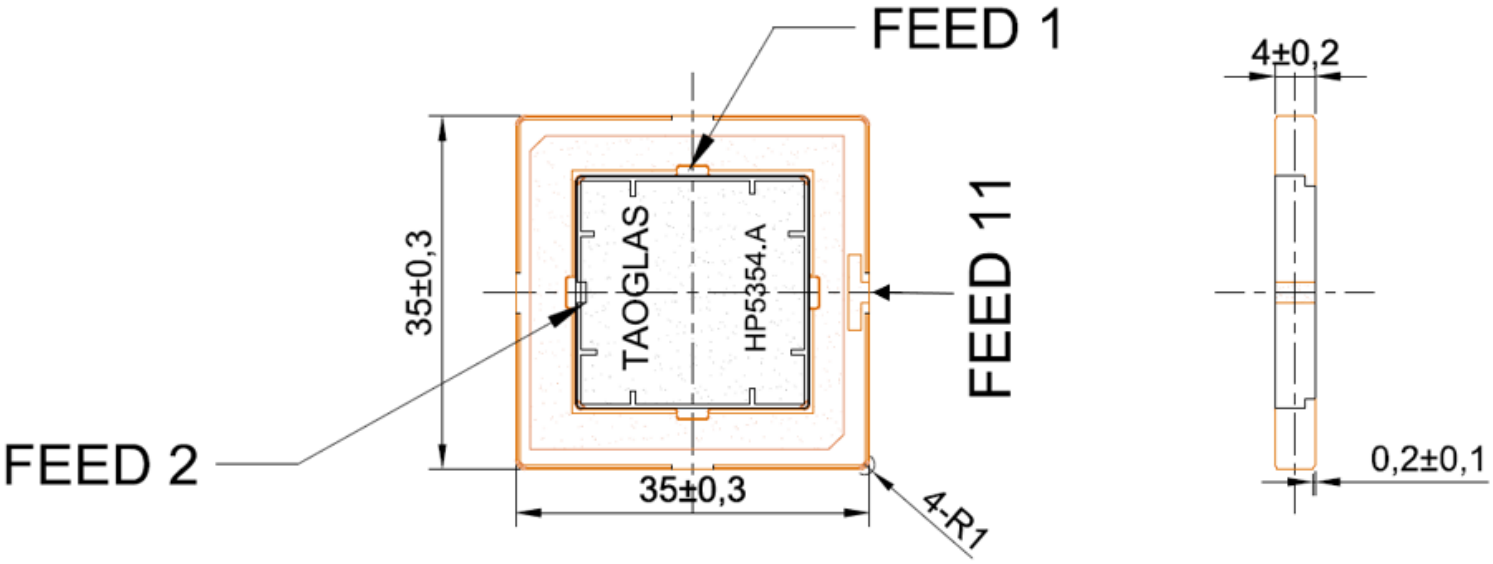

Feed	Description
1	L1 (0˚)
2	L1 (-90˚)
11	L5

5. Antenna Integration Guide

The following is an example on how to integrate the HP5354.A into a design. This antenna has three feeds, two feeds are used for the L1 band, and the other feed is used for the L5 band. A Hybrid coupler (HC125A) is used to combine the feeds for the L1 band, to create a Right Hand Circular Polarized (RHCP) signal at the output of the hybrid coupler. Taoglas recommends using a minimum of 70x70mm ground plane (PCB) to ensure optimal performance before being presented to the GNSS Module. Taoglas recommends our TFM.100B, a high-performance GNSS Module specifically engineered for use with our multi feed patches.

Top and bottom view of reference design board.

Please find the Integration files in Altium, 2D formats and the 3D model for the HP5354.A here:
https://www.taoglas.com/product/innovative-multi-band-gnss-l1-l5-low-profile-patch-antenna/

5.1 Schematic Symbol and Pin Definitions

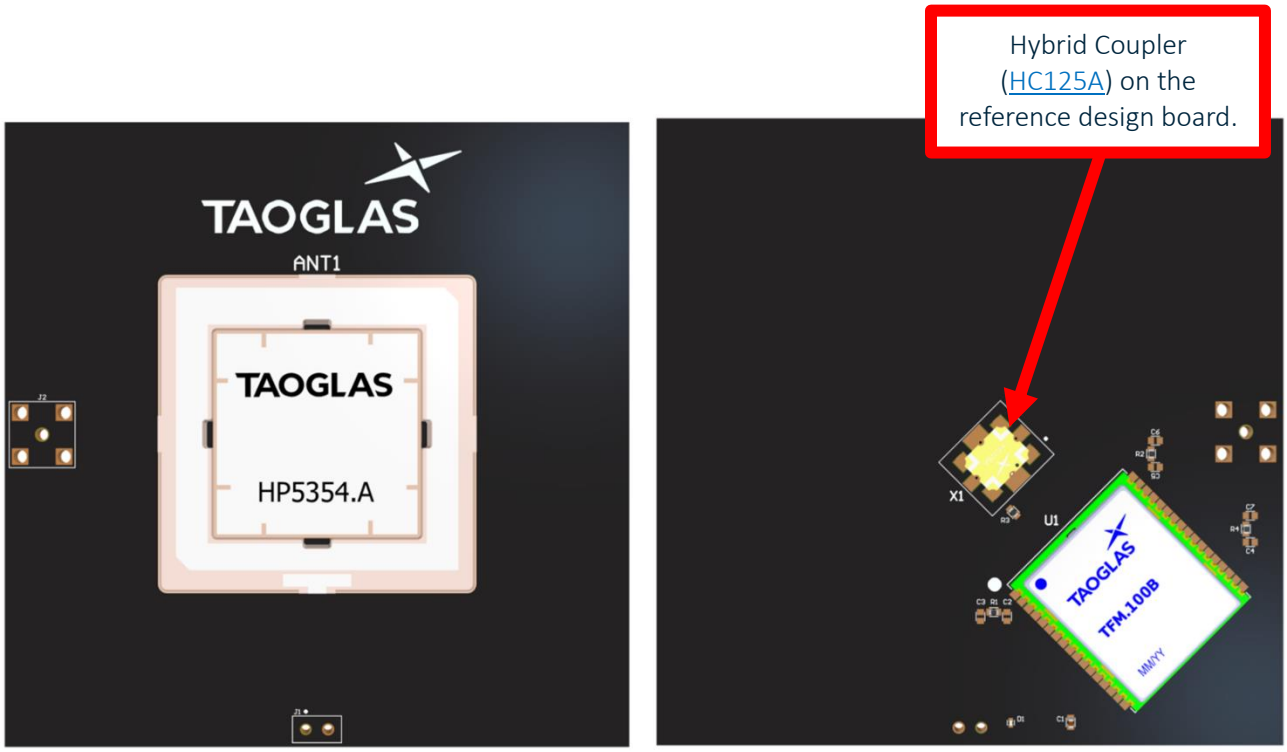

Above are the 3D models of the HP5354.A and HC125A on the reference design board.

The circuit symbol for the HP5354.A is shown below. The schematic symbol for the antenna has 11 pins as indicated below.

Feed	Description
1	L1 (0˚)
2	L1 (-90˚)
3-10	Ground
11	L5

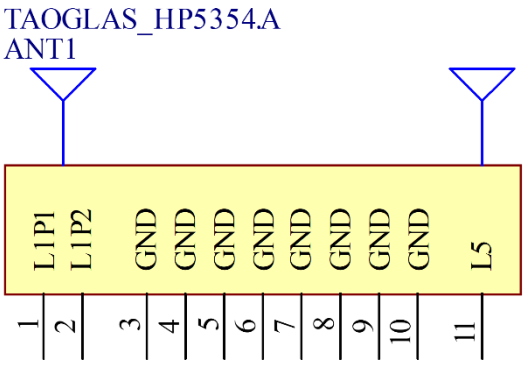

Above is a schematic symbol of HP5354.A and a table of the pin definitions.

5.2 Schematic Layout

The HP5354.A uses two orthogonal feeds that need to be combined in a hybrid coupler to ensure optimal axial ratio and RHCP Gain is achieved. Taoglas recommends our HC125A, a high-performance hybrid coupler specifically engineered for use with our multi feed patches.

The HC125A is required for the high GNSS band of operation (1559- 1610MHz) for this antenna. This hybrid coupler should be placed close to the antenna feed pads and terminated correctly using a 49.9 Ohm resistor.

Designator	Type	Value	Manufacturer	Manufacturer Part Number
R1	Resistor	49.9 Ohms	Panasonic	ERJ-2RKF49R9X

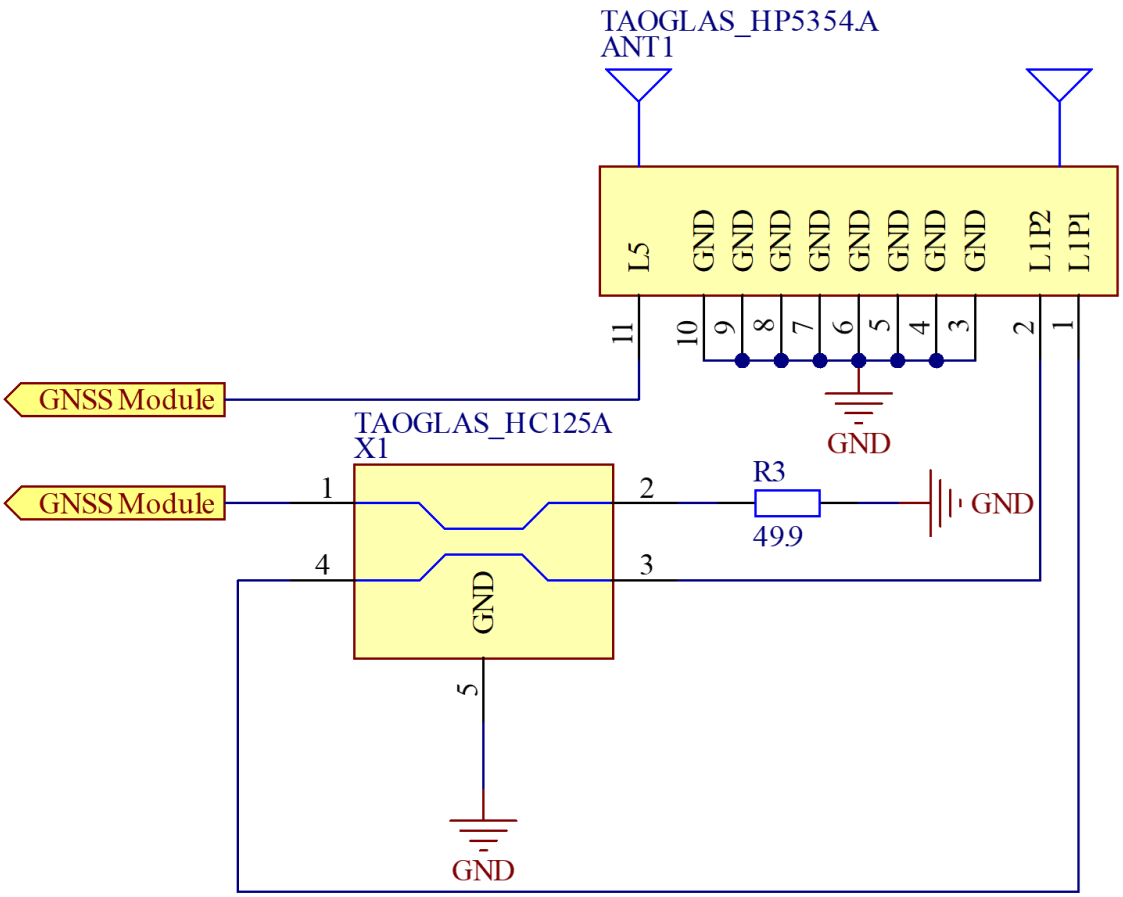

5.3 Antenna Solder Mask Footprint

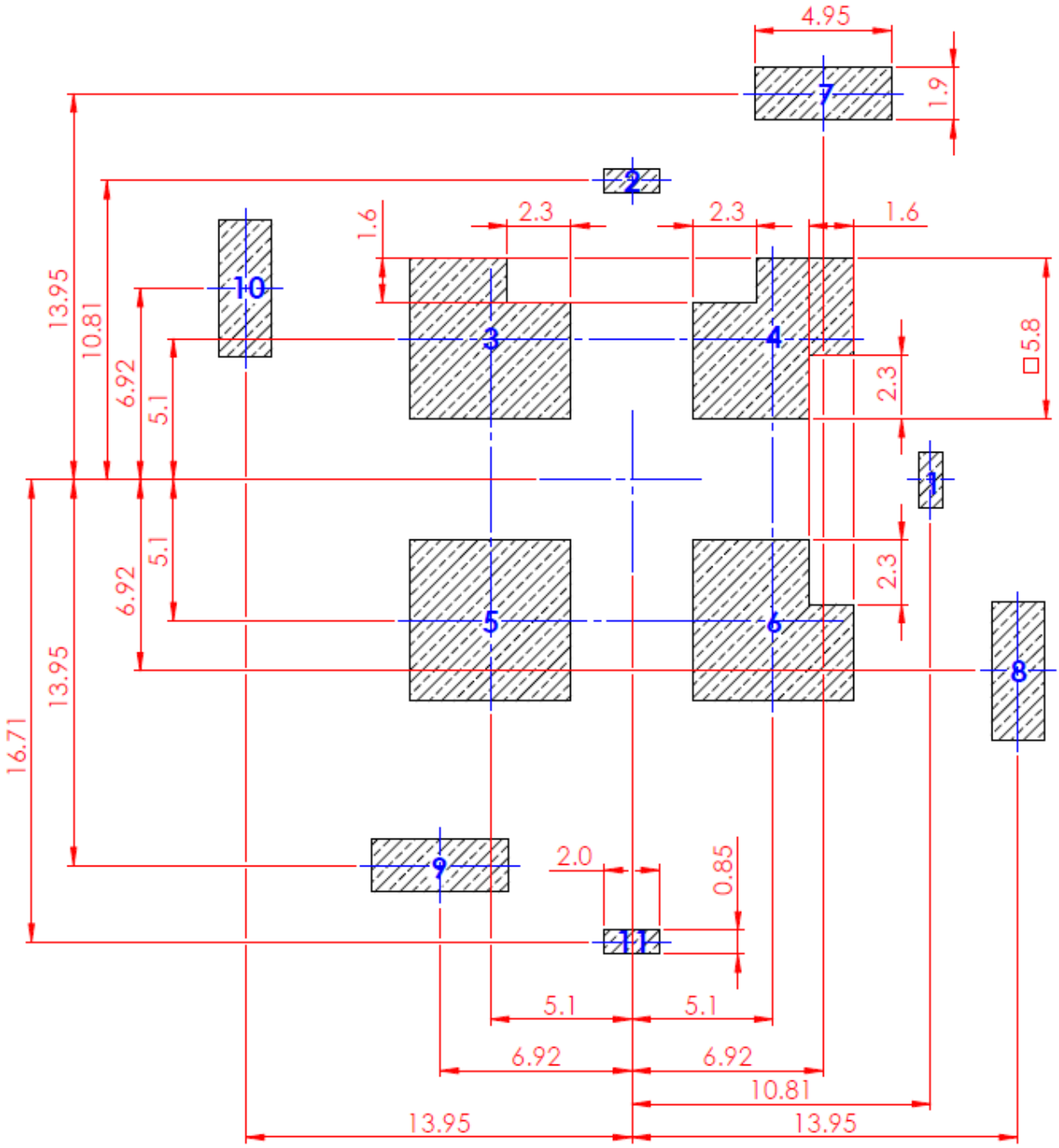

COPPER AREA

SOLDER PASTE AREA

PADS: 7,8,9,10 ARE ALL THE SAME SIZE
PADS: 1,2,11 ARE ALL THE SAME SIZE
PADS: 3,4,5,6 ARE ALL THE SAME SIZE
EXCLUDING CUT-OUTS

Feed	Description
1	L1 (0˚)
2	L1 (-90˚)
3-10	Ground
11	L5

5.4 Top Solder Paste

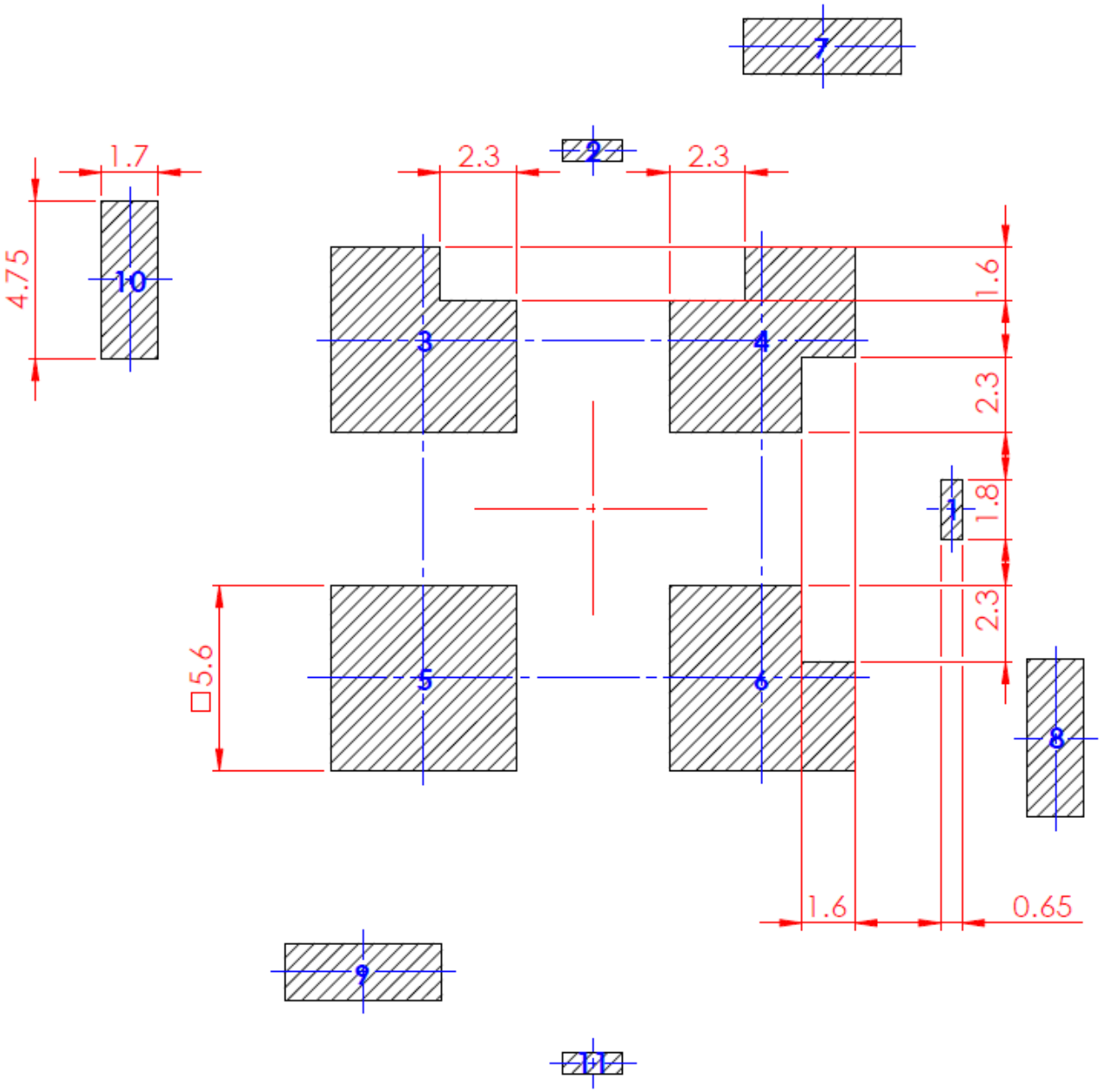

COPPER AREA

SOLDER PASTE AREA

PADS: 7,8,9,10 ARE ALL THE SAME SIZE
PADS: 1,2,11 ARE ALL THE SAME SIZE
PADS: 3,4,5,6 ARE ALL THE SAME SIZE
EXCLUDING CUT-OUTS

5.5 Copper Clearance for HP5354.A

The footprint and clearance on the reference design board must comply with the antenna's specification. The reference design board layout shown in the diagrams below demonstrates the HP5354.A clearance area for Pad 1 (L1P1(0˚) Pad), Pad 2 (L1P2(-90˚) Pad) and Pad 11 (L5 Pad). The copper keep out area only applies to the top layer.
There should be a 3x2.5mm copper clearance area around the antenna Feed Pads in the final design.

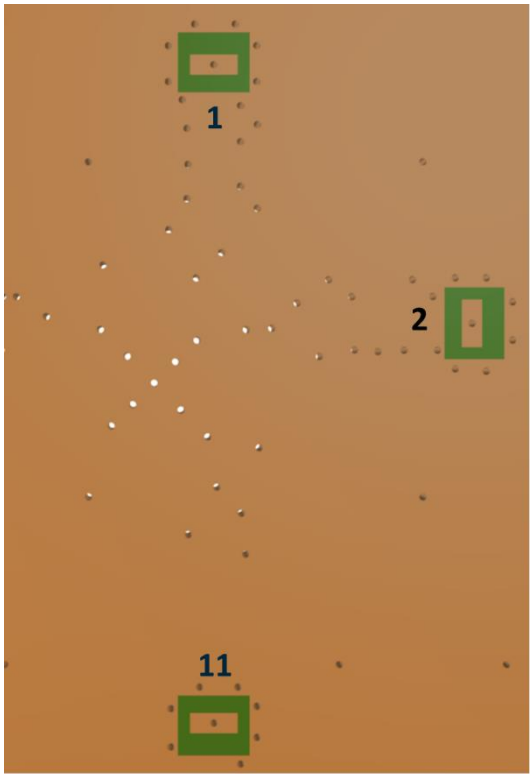

3D Image of Copper Clearances for HP5354.A.

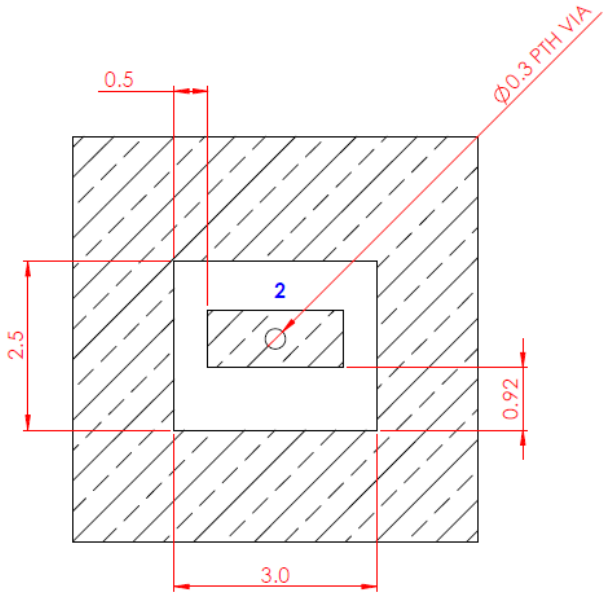

Copper Clearances for Pin 2 (L1P2(-90˚) Pad) of the HP5354.A.

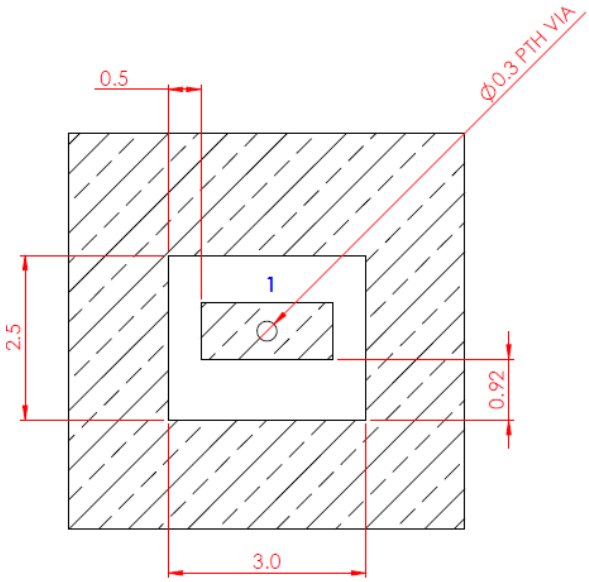

Copper Clearances for Pin 1 (L1P1(0˚) Pad) of the HP5354.A.

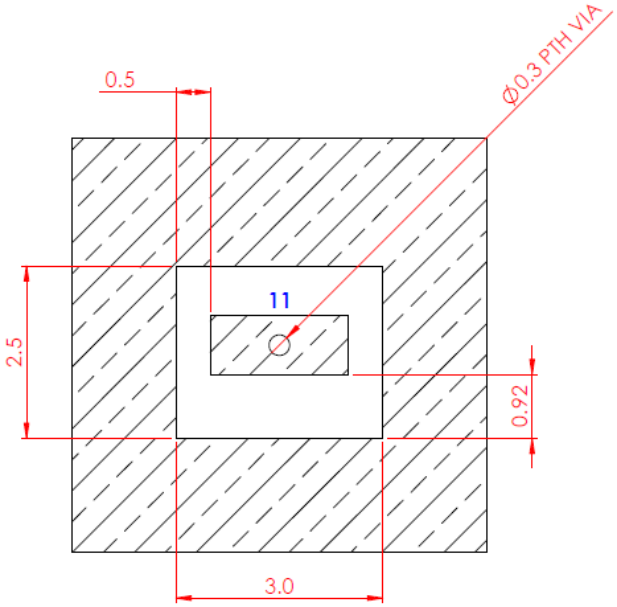

Copper Clearances for Pin 11 (L5 Pad) of the HP5354.A.

5.6 Copper Clearance for HP5354.A

The HP5354.A should be placed in the centre of the final design board to take advantage of the ground plane. The RF traces must maintain a 50 Ohm transmission line. From the hybrid coupler a “Pi” Matching Network is recommended for the RF transmission lines, the values and components for the matching circuit will depend on the tuning needed. Also shown is the 49.9 Ohm terminating resistor necessary for the hybrid coupler (HC125A). Ground vias should be placed around the transmission lines and the copper clearance area.

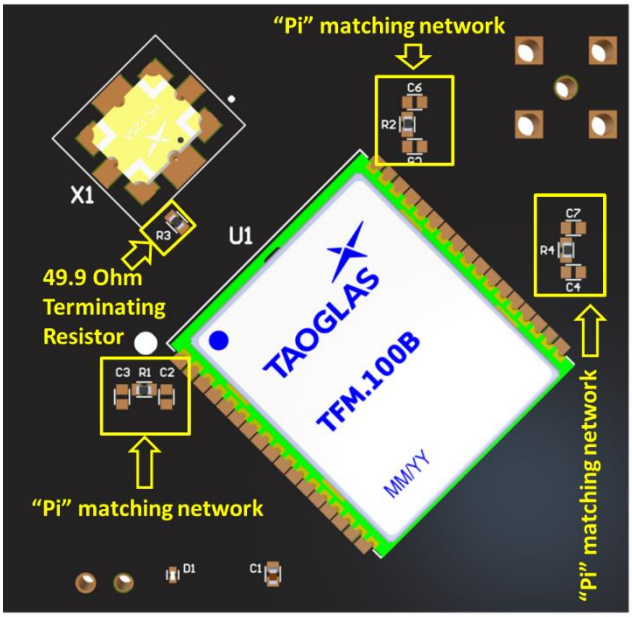

Bottom view of the reference design board, showing “Pi” matching network.

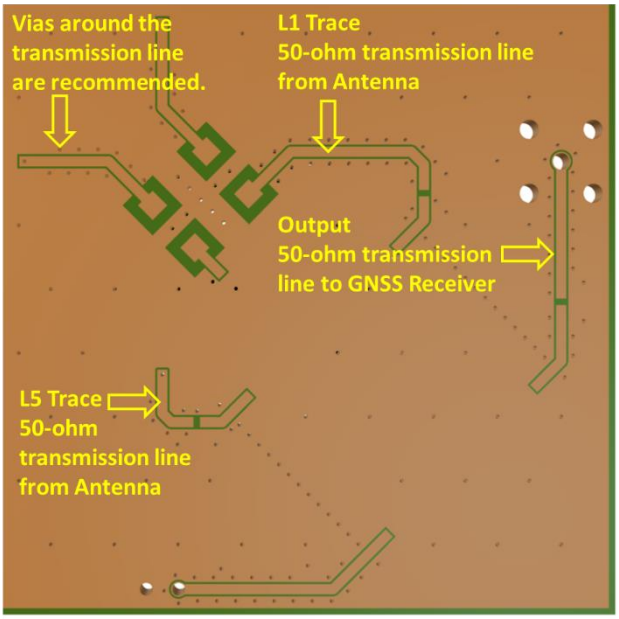

Bottom view of the reference design board, showing transmission lines and integration notes.

5.7 Final Integration

The bottom side image shown below highlights the antenna connection to the hybrid coupler (HC125A), matching Pi network components and a TFM.100B front end module. Taoglas recommends using a minimum of 70x70mm ground plane (PCB) to ensure optimal performance.

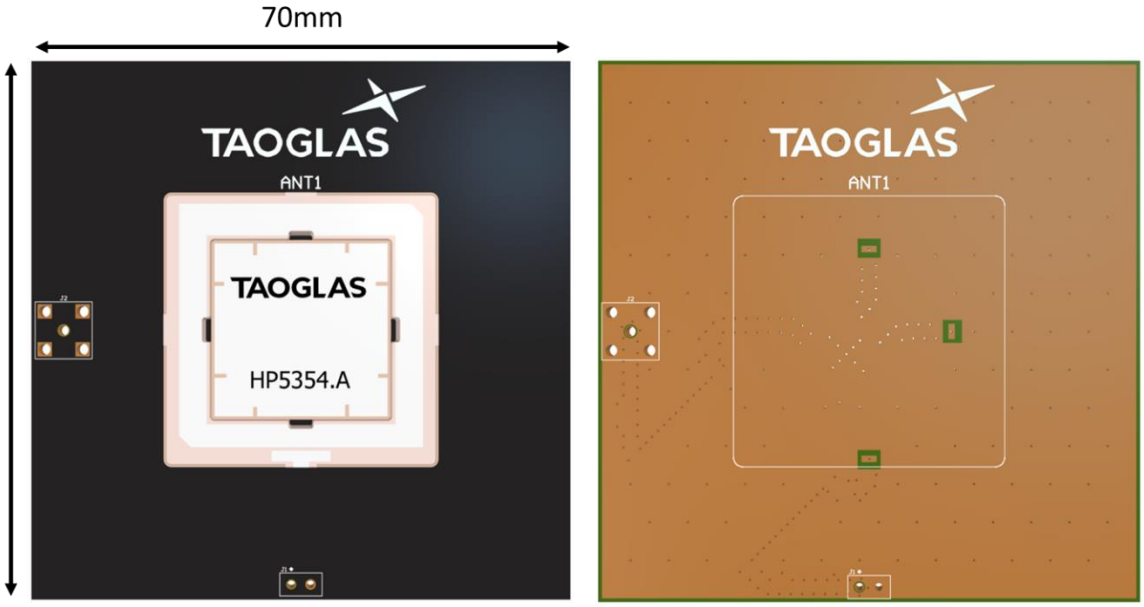

Top Side (HP5354.A placement on 70x70mm reference design board)

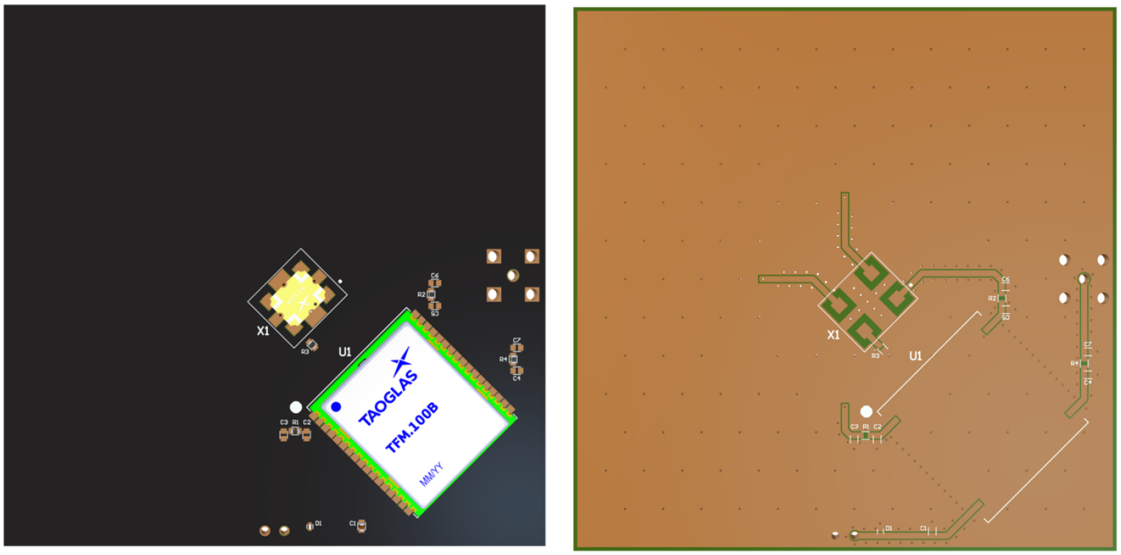

Bottom side (TFM.100B placement including HC125A)

6. Solder Reflow Profile

The HP5354.A can be assembled by following the recommended soldering temperatures are as follows:

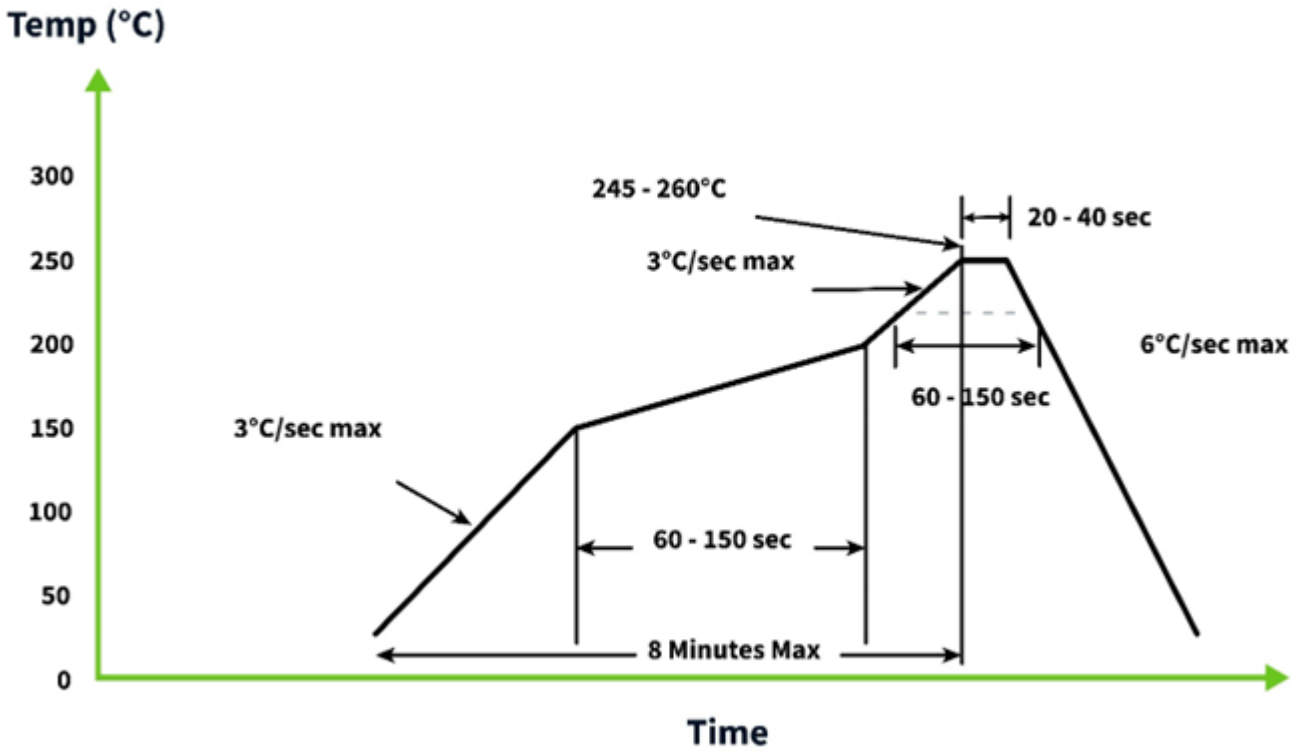

*Temperatures listed within a tolerance of +/- 10º C

Smaller components are typically mounted on the first pass, however, we do advise mounting the HP5354.A when placing larger components on the board during subsequent reflows.

Note: Soldering flux classified ROL0 under IPC J-STD-004 is recommended.

7. Packaging

200pcs HP5354.A per Reel

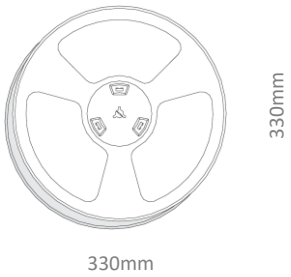

200pcs HP5354.A per Inner Carton
Dimensions: 350 x 340 x 60mm

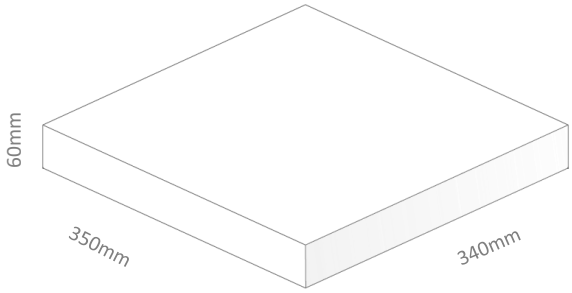

800pcs HP5354.A per Inner Carton
Dimensions: 370 x 360 x 275mm

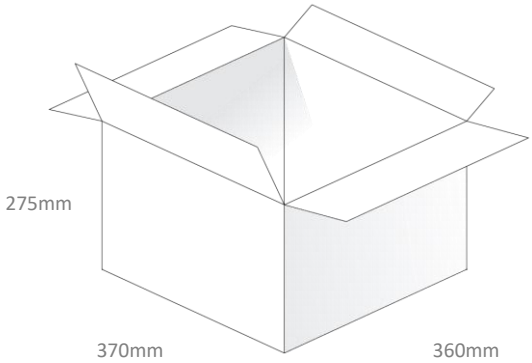

Changelog for the datasheet

SPE-23-8-249– HP5354.A

Revision: C (Current Release)	
Date:	2024-05-24
Notes:	Removed MSL from datasheet
Author:	Conor McGrath

Previous Revisions

Revision: B	
Date:	2024-01-26
Notes:	Added axial ratio data and updated integration guide.
Author:	Gary West

Revision: A (Original First Release)	
Date:	2023-09-12
Notes:	Initial Release
Author:	Cesar Sousa

TAOGLAS

TAOGLAS®

www.taoglas.com