TAMURA

ELECTRONICS COMPONENTS

Gate Driver

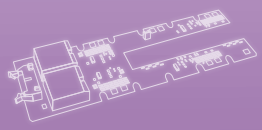

CONTENTS

■ Introduction — 2
■ Gate Driver Products overview — 3
■ Gate Driver Module | 2CG-B Series — 4
■ Gate Driver Module | 2CG-D Series — 6
■ Evaluation board for 2CG-B — 8
■ Gate Driver Unit | 2EG-C Series — 10
■ Gate Driver Unit | 2LG-C Series — 12
■ Gate Driver Unit | 2PG-C Series — 14
■ Gate Driver Unit | 2QG-C Series — 16
■ Gate Driver Unit | 4DUx Series — 18
■ Gate Driver Unit | 2EG-B Series — 20
■ DC-DC Converter | 2DD Series — 22

＊EOL Products.

■ Gate Driver Module | 2DM Series — 24
■ Gate Driver Unit | 2DU Series — 25

■ Product Cross reference — 26
■ Part numbering system — 29
■ Important Notices — 30

Introduction

■ What's the TAMURA's Gate Driver?

TAMURA's Gate Driver is a 2-channel isolated circuit module for IGBT / SiC MOSFET.
The Gate Driver features a DC / DC converter and integrated drive circuit.
The Gate Driver is designed for robust operation in applications using IGBT / SiC MOSFET.

■ Features

Wide Input Voltage

Low Stray Capacity

High-Speed Response & Accuracy

Gate Driver Products overview

You can refer to gate driver's web selection guide from this code

Category	Function	Block diagram	Appearance
DC-DC Converter	DC-DC Converter for 2in1 Power Module	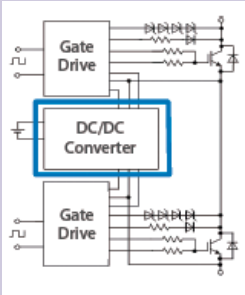	
Gate Driver Module	DC-DC Converter + Gate drive Circuit	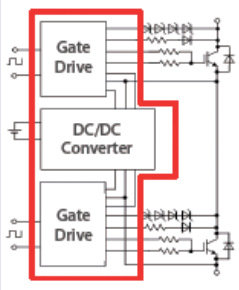	
Gate Driver Unit	Gate Driver Module + Gate resistors Protective function	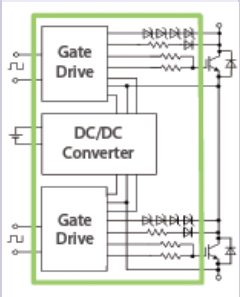	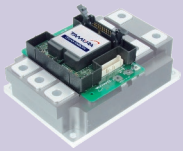

Product Lineup

Gate Driver Module

2CG-B Series

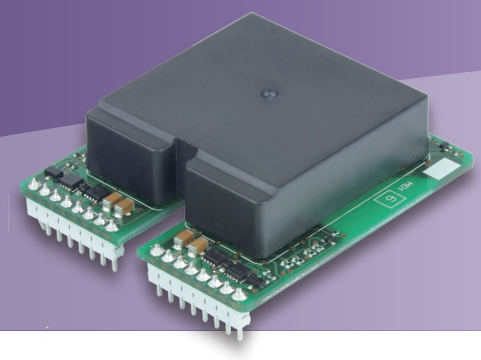

Applications

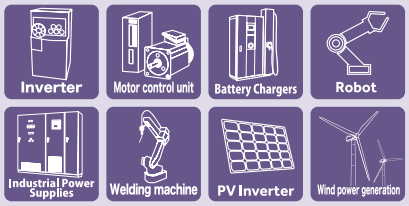

Features

1. All-in-one (built-in DC-DC converter/ Gate driver)
2. High insulation voltage (AC5kV)
3. Low stray capacity (12pF TYP)
4. Dual output corresponding to 2 in 1
5. Wide input voltage range (DC13V-28V)

Standards

UL508 compliant

The next generation gate driver emerges with high insulation voltage (support to 1700V module) and low profile, in addition to the conventional low stray capacity.

Application Image

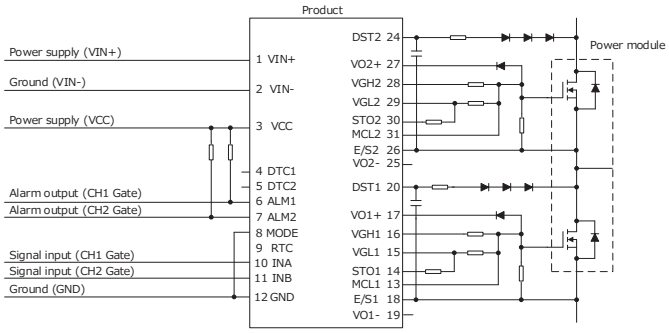

Outline Dimensional Drawing

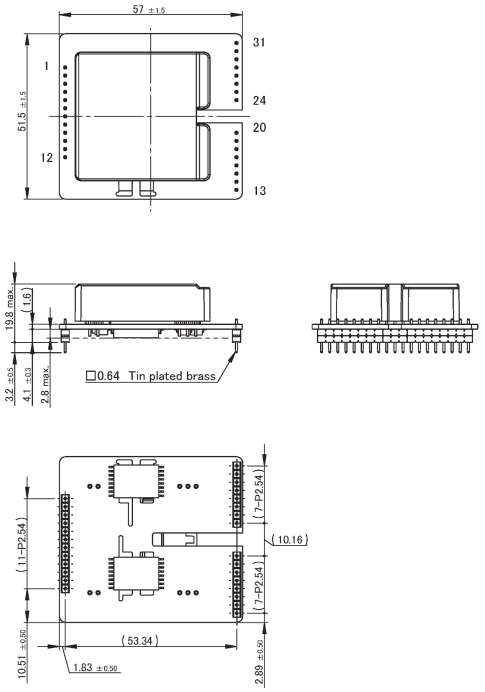

Unit: mm
Note: 1.The dimensional tolerance without directions is ± 0.5mm.

General characteristics

Model		2CG010BBC11N	2CG010BBC12N	2CG010BBC13N	2CG010BBC14N	2CG010BBC15N
Application		IGBT		SiC-MOSFET		
Input	Input Voltage Range	DC13V ~ 28V				
	Logic Input Voltage	DC3.3V ~ 5V				
Output	Number of Output	2				
	Output Power (per 1ch)	3.8W	3.3W	3.3W	3.0W	T.B.D
	Gate Voltage (ON)	+14V ~ +16V	+14V ~ +16V	+17V ~ +19V	+17V ~ +19V	+14V ~ +16V
	Gate Voltage (OFF)	–9V ~ –11V	–14V ~ –16V	–3V ~ –5V	–1V ~ –3V	–3V ~ –5V
	Peak Output Current (Gate Current)	±43A				
Insulation	Withstand Voltage	Primary to secondary : AC5000V				
		Secondary to secondary : AC4000V				
	Delay Time	100ns				
	Minimum Clearance Distance	Primary to secondary : 14mm				
		Secondary to secondary : 7mm				
	Minimum Creepage Distance	Primary to secondary : 14mm				
		Secondary to secondary : 12mm				
Function	Switching Mode Select	Direct mode and half bridge mode can be selected				
	Dead Time (Half Bridge Mode)	Adjustable by external circuit				
	Desaturation Protection	Yes				
	Soft Turn Off	Yes				
	Miller Clamp	Yes				
	Protection Release Condition	Auto recovery				
Environment	Ambient Temperature (Operating)	–40 ~ +85˚C (Input Voltage ~ DC13V ~ 18V)				
		–40 ~ +75˚C (Input Voltage ~ DC18V ~ 28V)				
	Ambient Humidity (Operating)	20 ~ 95% RH (No condensation)				
	Ambient Temperature (Storage)	–40 ~ +90˚C				
	Ambient Humidity (Storage)	5 ~ 95% RH (No condensation)				

*The content of this document is subject to change without prior notice for the purpose of improvements, etc.

Pin assignment

Input side

Pin No.	Name	Explanation of pins
1	VIN+	Power supply terminal for DC/DC converter (+)
2	VIN-	Power supply terminal for DC/DC converter (-)
3	VCC	Power supply input pin of driver circuit
4	DTC1	Power supply terminal for DC/DC converter (+)
5	DTC2	Power supply terminal for DC/DC converter (-)
6	ALM1	Power supply terminal for DC/DC converter (+)
7	ALM2	Power supply terminal for DC/DC converter (-)
8	MOD	Mode selection pin
9	RTC	Pin for adjusting the recovery time of the protection circuit
10	INA	Control input terminal A
11	INB	Control input terminal B
12	GND	Ground pin for drive circuit

Output side

Pin No.	Name	CH	Explanation of terminal
13	MCL1	1	Miller clamp pin
14	STO1	1	Soft turn off pin
15	VGL1	1	OFF side of gate output
16	VGH1	1	ON side of gate output
17	VO1+	1	DC/DC converter output pin
18	E/S1	1	Emitter or source connection pin
19	VO1-	1	DC/DC converter output pin
20	DST1	1	Desaturation protection pin
21	None		None
22	None		None
23	None		None
24	DST2	2	Desaturation protection pin
25	VO2-	2	DC/DC converter output pin
26	E/S2	2	Emitter or source connection pin
27	VO2+	2	DC/DC converter output pin
28	VGH2	2	ON side of gate output
29	VGL2	2	OFF side of gate output
30	STO2	2	Soft turn off pin
31	MCL2	2	Miller clamp pin

Product Lineup

Gate Driver Module

2CG-D Series

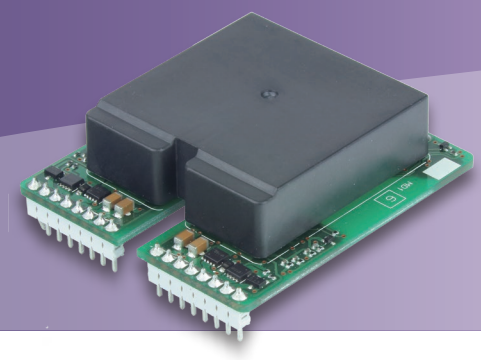

Applications

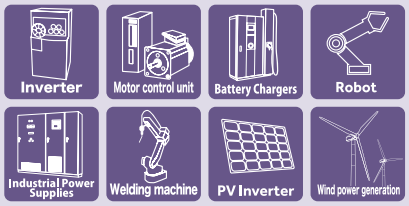

Features

1. All-in-one (built-in DC-DC converter/ Gate driver)
2. High insulation voltage (AC5kV)
3. Low stray capacity (12pF TYP)
4. Dual output corresponding to 2 in 1
5. Wide input voltage range (DC13V-28V)

Standards

UL508 compliant

The next generation gate driver emerges (With Active Clamp) with high insulation voltage (support to 1700V module) and low profile, in addition to the conventional low stray capacity.

Application Image

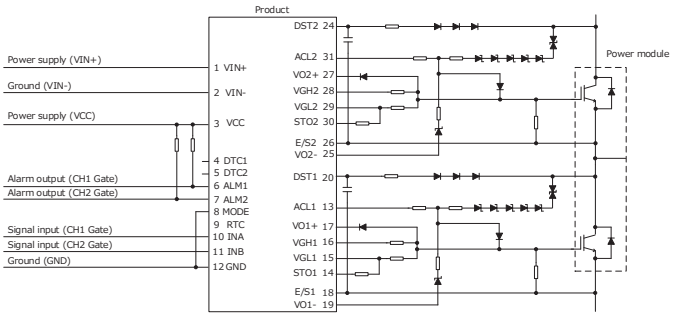

Outline Dimensional Drawing

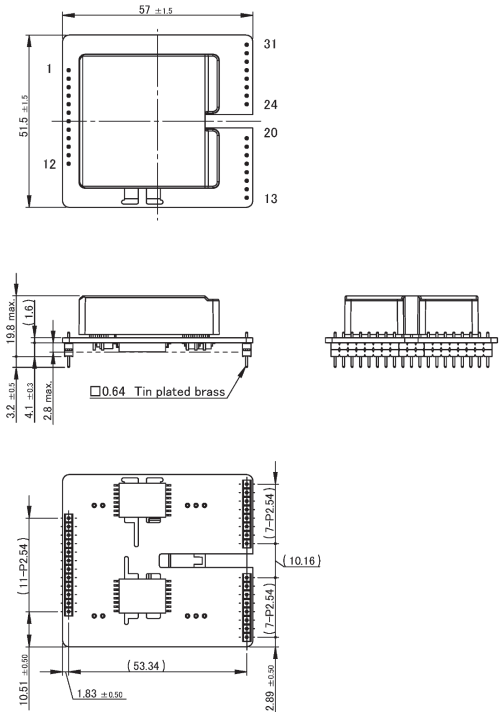

Unit: mm
Note: 1.The dimensional tolerance without directions is ± 0.5mm.

General characteristics

Model		2CG010DBC11N	2CG010DBC12N
Application		IGBT	
Input	Input Voltage Range	DC13V ~ 28V	
	Logic Input Voltage	DC3.3V ~ 5V	
Output	Number of Output	2	
	Output Power (per 1ch)	4W	T.B.D
	Gate Voltage (ON)	+14V ~ +16V	+14V ~ +16V
	Gate Voltage (OFF)	–9V ~ –11V	–14V ~ –16V
	Peak Output Current (Gate Current)	±43A	
Insulation	Withstand Voltage	Primary to secondary : AC5000V	
		Secondary to secondary : AC4000V	
	Delay Time	100ns	
	Minimum Clearance Distance	Primary to secondary : 14mm	
		Secondary to secondary : 7mm	
	Minimum Creepage Distance	Primary to secondary : 14mm	
		Secondary to secondary : 12mm	
Function	Switching Mode Select	Direct mode and half bridge mode can be selected	
	Dead Time (Half Bridge Mode)	Adjustable by external circuit	
	Desaturation Protection	Yes	
	Soft Turn Off	Yes	
	Active Clamp	Yes	
	Protection Release Condition	Auto recovery	
Environment	Ambient Temperature (Operating)	–40 ~ +85˚C (Input Voltage ~ DC13V ~ 18V)	
		–40 ~ +75˚C (Input Voltage ~ DC18V ~ 28V)	
	Ambient Humidity (Operating)	20 ~ 95% RH (No condensation)	
	Ambient Temperature (Storage)	–40 ~ +90˚C	
	Ambient Humidity (Storage)	5 ~ 95% RH (No condensation)	

*The content of this document is subject to change without prior notice for the purpose of improvements, etc.

Pin assignment

Input

Pin No.	Name	CH	Function
1	VIN+	Common	Power supply for DC/DC converter (+)
2	VIN–	Common	Power supply for DC/DC converter (–)
3	VCC	—	Power supply for drive circuit
4	DTC1	1	Dead time adjustment
5	DTC2	2	Dead time adjustment
6	ALM1	1	Alarm signal output
7	ALM2	2	Alarm signal output
8	MOD	—	Mode select
9	RTC	—	Recovery time of protection circuit control
10	INA	1	Control input A
11	INB	2	Control input terminal B
12	GND	—	Control input B

Output

Pin No.	Name	CH	Function
13	ACL1	1	Active clamp pin
14	STO1	1	Soft turn off pin
15	VGL1	1	Gate OFF side pin
16	VGH1	1	Gate ON side pin
17	VO1+	1	DC/DC converter output pin
18	E/S1	1	Emitter · source connection pin
19	VO1–	1	DC/DC converter output pin
20	DST1	1	Desaturation protection pin
21	NONE		None
22	NONE		None
23	NONE		None
24	DST2	2	Desaturation protection pin
25	VO2–	2	DC/DC converter output pin
26	E/S2	2	Emitter · source connection pin
27	VO2+	2	DC/DC converter output pin
28	VGH2	2	Gate ON side pin
29	VGL2	2	Gate OFF side pin
30	STO2	2	Soft turn off pin
31	ACL2	2	Active clamp pin

Product Lineup

Evaluation board for 2CG-B series

2RB Series

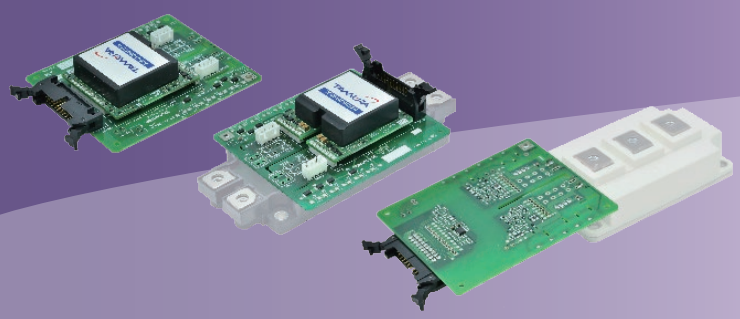

Applications

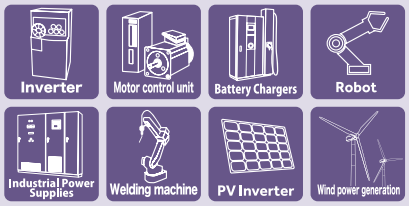

Features

1. You can start evaluating the Gate driver module right away.
2. With DESAT protection circuit

2RB series is an evaluation board dedicated to Gate Driver Module. You can start evaluating the Gate Driver Module (2CG-B series) right away.

Noted
The purpose of this product is to easily evaluate the power module.
It cannot be used in mass production.

Internal Block Diagram

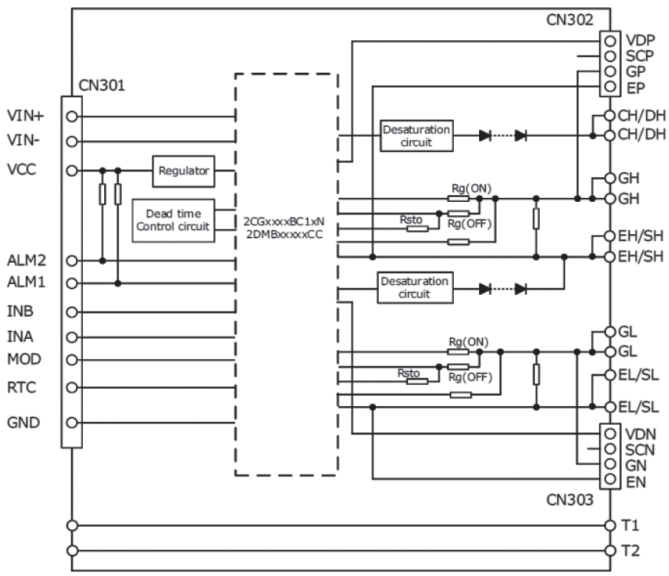

General characteristics of 2RB series

Port no	2RB010CB	2RB020BB
Power semiconductor device	For IGBT EconoDUAL™ / 62mm	For SiC MOSFET 62mm / Mitsubishi
Operating Temperature	–40 ~ 85ºC	–40 ~ 85ºC
Storage Temperature	–40 ~ 90ºC	–40 ~ 90ºC
Input voltage (VIN)	13 ~ 28V	13 ~ 28V
Input voltage (Vcc)	13 ~ 28V	13 ~ 28V
Signal input voltage	3.3 ~ 5V	3.3 ~ 5V
DESAT voltage	10V	5V
DESAT detection time	4us	1us
Soft Turn Off (Resistor)	50Ω	50Ω
Miller Clamp	N/A	Yes

EconoDUAL™ is registered trademark of Infineon Technologies AG, Germany.

2RB010CB

Outline Dimensional Drawing

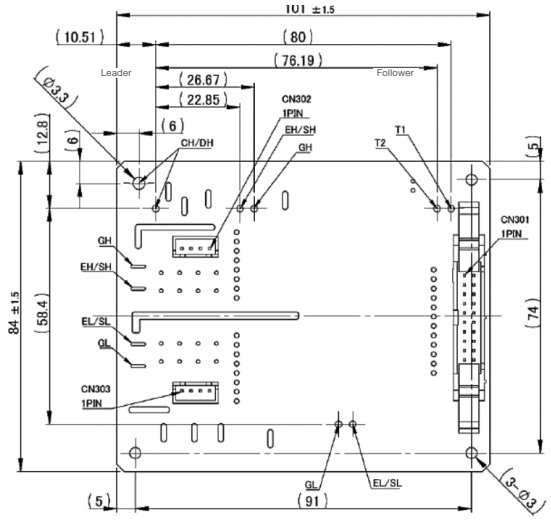

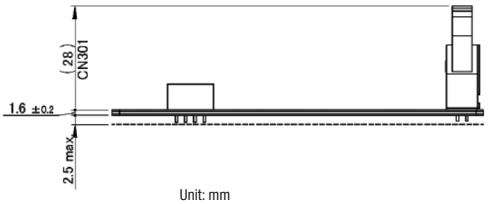

Unit: mm
Note: 1.The dimensional tolerance without directions is ± 0.5mm.

2RB020BB

Outline Dimensional Drawing

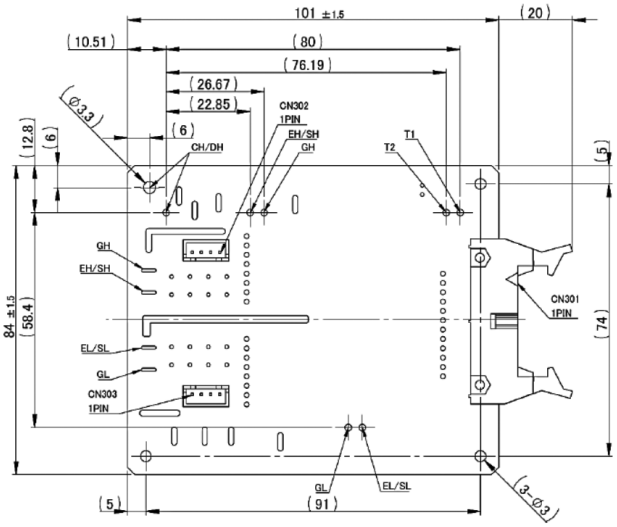

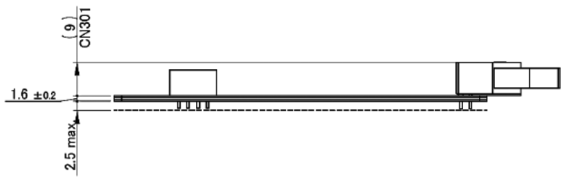

Unit: mm
Note: 1.The dimensional tolerance without directions is ± 0.5mm.

Product Lineup

Gate Driver Unit

2EG-C Series

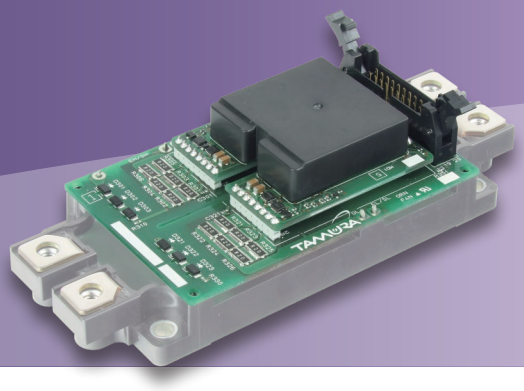

Applications

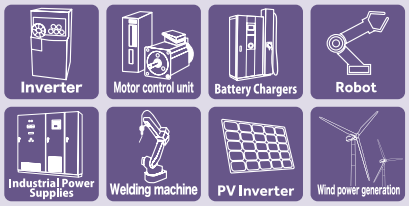

Features

1. High insulation voltage (AC5kV)
2. Low profile (20mmMax, From the board mounting position)
3. Low stray capacity (12pF TYP)
4. Wide input voltage range (DC13V-28V)
5. Soft-turn-off

Standards

UL508 compliant

2EG-C series is suitable for IGBT power module. (support to 1700V module)
Built-in isolated DC / DC converter and gate drive circuit
and short circuit detection voltage have already been set.
Gate resistance is not assembled.
They must be assembled by the user before operation.

Application Image

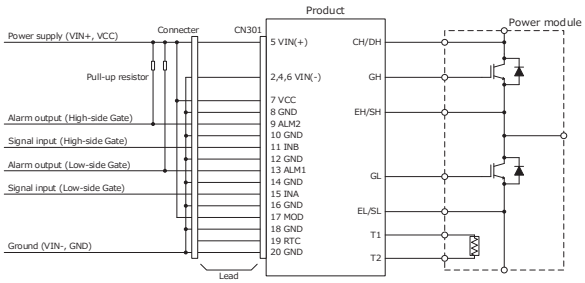

Outline Dimensional Drawing

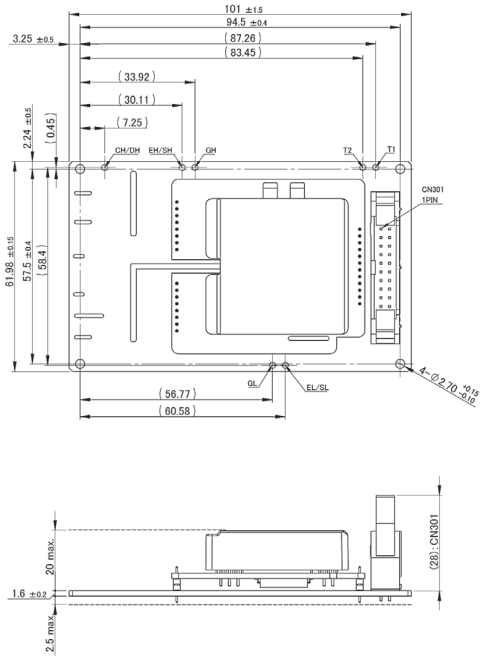

Unit: mm
Note: 1.The dimensional tolerance without directions is ± 0.5mm.

General characteristics

Model		2EG01XCDN11N	2EG01XCCN11N
Application		IGBT (~1700V)	
Input	Input Voltage Range (VIN, VCC)	DC13V ～ 28V	
	Logic Input Voltage (INA, INB)	DC13 ～ 18V	DC3.3 ～ 18V
Output	Number of Output	2	
	Gate Voltage (ON)	+14V ～ +16V	
	Gate Voltage (OFF)	−9V ～ −11V	
	Maximum Switching Frequency	100kHz *2	
Insulation	Withstand Voltage	Primary to secondary : AC5000V	
	Delay Time	±130ns (TYP)	
	Minimum Clearance Distance	*3 Please refer to below information	
	Minimum Creepage Distance	*3 Please refer to below information	
Function	Mode select	Direct mode / Half bridge mode can be switched	
	Desaturation Protection	Yes	
	Soft Turn Off	Yes	
	Miller Clamp	None	
	Active Clamp	None	
	Protection Release Condition	Auto Recovery, Interval: 110 ms (TYP)	
	Gate resistor	No mounting / Lead resistor can be mounted.	
Environment	Ambient Temperature (Operating)	−40 ～ +85℃ (Input Voltage:DC13V ～ 18V)	
		−40 ～ +75℃ (Input Voltage:DC18V ～ 28V)	
	Ambient Humidity (Operating)	20 ～ 95%RH (Nil condensation)	
	Ambient Temperature (Storage)	−40 ～ +90℃	
	Ambient Humidity (Storage)	5 ～ 95%RH (Nil condensation)	

*The content of this document is subject to change without prior notice for the purpose of improvements, etc.

*2 Permissible frequency curve
Gate resistor power derating is not included.
Use the output power in a range with sufficient margin for the allowable power of the gate resistor.
Recommended resistor surface temperature 120ºC or less.

Total gate charge (Qg) vs permissible frequency curve

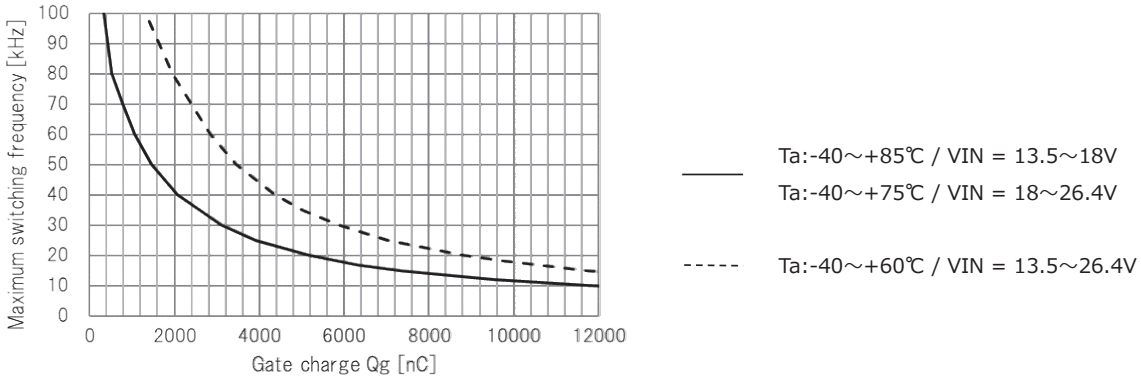

*3 Insulation

Item	Specification	Conditions · Note
Between Input-Output		
Minimum clearance distances	14mm	As for Gate driver PCB
Minimum clearance distances	16mm	
Between Input-Output / IGBT device terminal - Gate driver PCB Input side		
Minimum clearance distances	15mm	Infineon / EconoDUAL package
Minimum clearance distances	16mm	
Minimum clearance distances	13.4mm	Mitsubishi electronics / NX_DX package
Minimum clearance distances	16mm	
Minimum clearance distances	12mm	Fuji electronics / M254,M285 package
Minimum clearance distances	16mm	
Between CH1-CH2		
Minimum clearance distances	7mm	Excluding electrical connections point
Minimum clearance distances	12mm	

Product Lineup

Gate Driver Unit

2LG-C Series

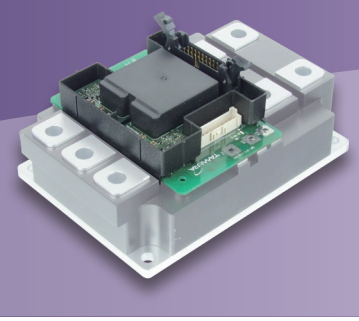

Applications

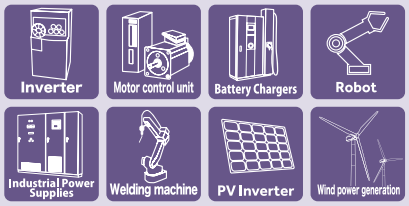

Features

1. High insulation voltage (AC5kV)
2. Low profile (23.5mmMax, From the board mounting position)
3. Low stray capacity (12pF TYP)
4. Wide input voltage range (DC13V-28V)
5. Soft-turn-off

Standards

UL508 compliant

2LG-C series is suitable for LV100.
Built-in isolated DC / DC converter and gate drive circuit, in addition, gate resistor and short circuit detection voltage have already been set.

Leader board

Application Image

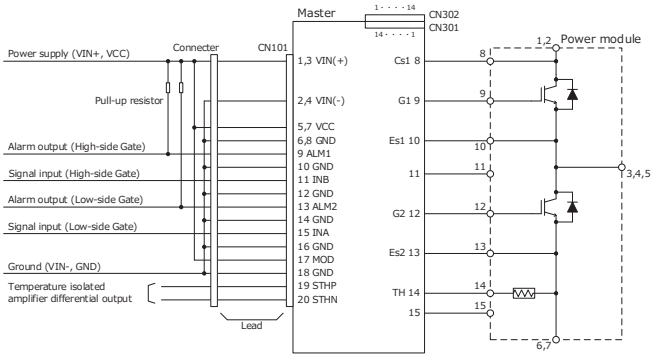

Outline Dimensional Drawing

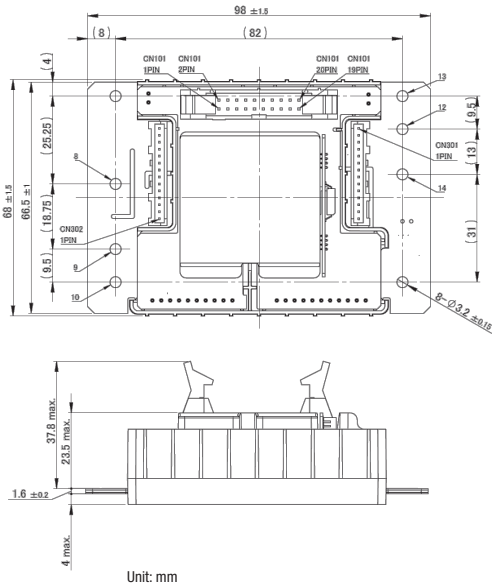

Unit: mm
Note: 1.The dimensional tolerance without directions is ± 0.5mm.

※2LG07ACDC11M has a different shape of the connector that connects the leader board and the follower board. Please refer to the data sheet for details.

General characteristics

Electrical Specification (Ta=25ºC)

Application		CM1200DW-34T CM800DW-34T/34TA			CM1200DW-24T CM800DW-24T			CM1200DW-40T	
Item		Leader		Follower	Leader		Follower	Leader	Follower
Model		2LG01ACDC11M	2LG01ACCC11M	2LG01ACZC11S	2LG02ACDC11M	2LG02ACCC11M	2LG02ACZC11S	2LG07ACDC11M	2LG07ACZC11SP
Input	Input Voltage Range	DC13 ~ 28V		N/A	DC13 ~ 28V		N/A	DC13 ~ 28V	N/A
	Logic Input Voltage *1	DC13 ~ 18V	DC3.3 ~ 18V	Depends on the leader board	DC13 ~ 18V	DC3.3 ~ 18V	Depends on the leader board	DC13 ~ 16V	Depends on the leader board
Output	Number of Output	2							
	Gate Voltage (ON)	+14V ~ +16V							
	Gate Voltage (OFF)	−9V ~ 11V							
	Maximum Gate Charge	CM1200DW-34T: 14000nC CM800DW-34T/34TA: 9600nC			CM1200DW-24T: 14000nC CM800DW-24T: 8500nC			14000nC	
	Maximum Switching Frequency (Reference value)	CM1200DW-34T: 7.5kHz (Leader only) 3.8kHz (1leader/1follower) CM800DW-34T/34TA: 10.5kHz (Leader only) 5.4kHz (1leader/1follower)			CM1200DW-24T: 3.0kHz (Leader only) 2.8kHz (1leader/1follower) CM800DW-24T: 5.2kHz (Leader only) 4.6kHz (1leader/1follower)			(7.0kHz) (Leader only) 2.8kHz (1leader/1follower)	
Insulation	Withstand Voltage	Primary to secondary : AC5000V							
	Delay Time	±130ns (TYP)							
	Minimum Clearance Distance	Primary to secondary : 14mm							
	Minimum Creepage Distance	Primary to secondary : 16mm							
Function	Mode select	Direct mode / Half bridge mode can be switched							
	Desaturation Protection	Yes							
	Soft Turn Off	Yes							
	Miller Clamp	None							
	Active Clamp Gate	None ※1							
	Protection Release Condition	Auto Recovery, Interval: 110 ms (TYP)							
	Thermistor Isolated Circuit	Yes ※2							
Environment	Ambient Temperature (Operating)	−40 ~ +85ºC (Input Voltage: DC13V ~ 18V)							
		−40 ~ +75ºC (Input Voltage: DC18V ~ 28V)							
	Ambient Humidity (Operating)	20 ~ 95%RH (Nil condensation)							
	Ambient Temperature (Storage)	−40 ~ +90ºC							
	Ambient Humidity (Storage)	5 ~ 95%RH (Nil condensation)							
Coating	Insulating moisture proof coating	Yes							

※1 Active clamp function is optional. Please contact us.

※2 Non-impermentation of thermistor isolation circuit is optional. Please contact us.

Follower board

Application Image

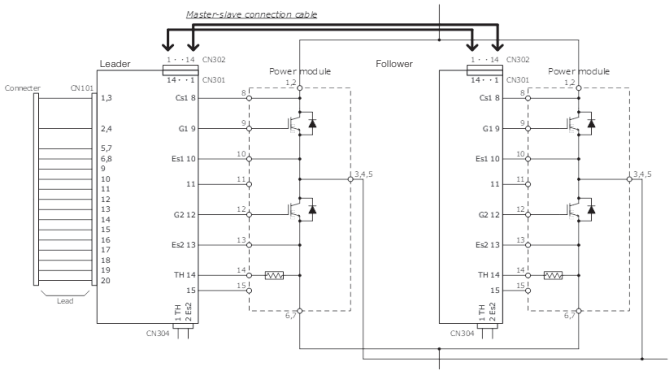

Outline Dimensional Drawing

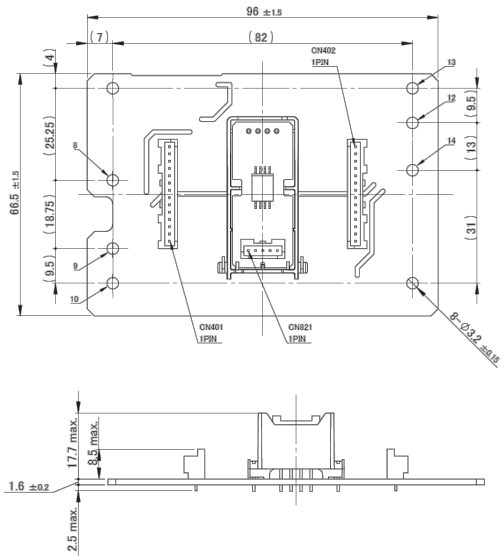

Unit: mm

Note: 1.The dimensional tolerance without directions is ± 0.5mm.

※2LG07ACZC11SP has a different shape of the connector that connects the leader board and the follower board. Please refer to the data sheet for details.

Product Lineup

Gate Driver Unit

2PG-C Series

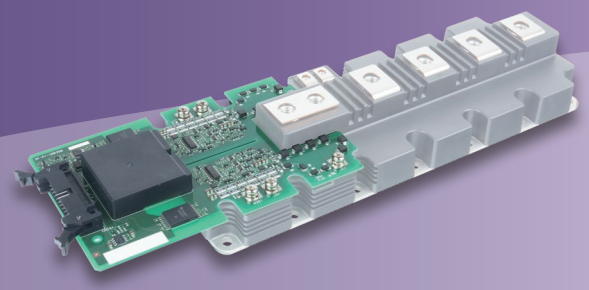

Applications

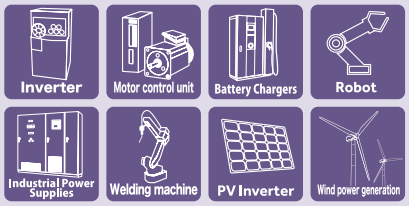

Features

1. High insulation voltage (AC5kV)
2. Low profile (14mmMax, From the board mounting position)
3. Low stray capacity (12pF TYP)
4. Wide input voltage range (DC13V-28V)
5. Soft-turn-off

Standards

UL508 compliant

2PG-C series is suitable for PrimePACK™.
Built-in isolated DC / DC converter and gate drive circuit, in addition, gate resistor and short circuit detection voltage have already been set.

Note1: PrimePACK™ is a registered trademark of Infineon Technologies AG.

Application Image

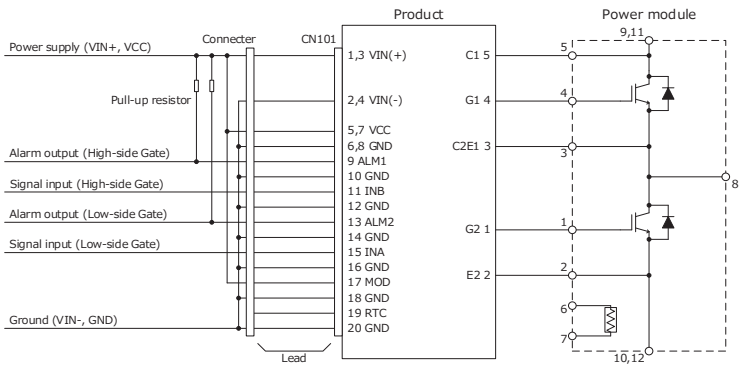

Outline Dimensional Drawing

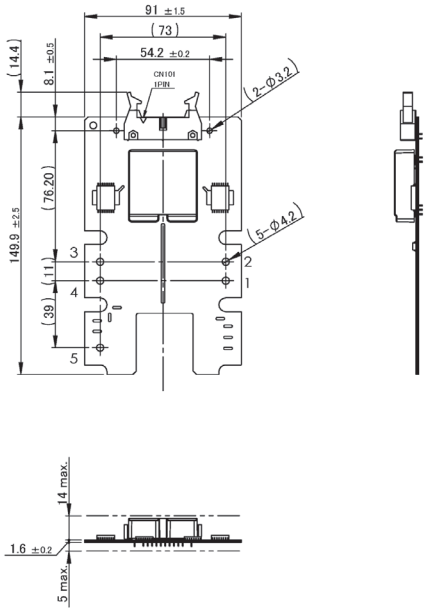

Unit: mm
Note: 1.The dimensional tolerance without directions is ± 0.5mm.

General characteristics

Model		2PG010CCC11N	2PG010CDC11N
Application		2MBI1800XXF170-50 (Fuji Electric)	
Input	Input Voltage Range	DC13V ～ 28V	
	Logic Input Voltage	DC3.3 ～ 18V	DC13 ～ 18V
Output	Number of Output	2	
	Gate Voltage (ON)	+14V ～ +16V	
	Gate Voltage (OFF)	−9V ～ −11V	
	Maximum Gate Charge	11000nC	
	Maximum Switching Frequency	10kHz	
Insulation	Withstand Voltage	Primary to secondary : AC5000V	
	Delay Time	±130ns (TYP)	
	Minimum Clearance Distance	Primary to secondary : 14mm	
		Secondary to secondary : 8mm	
	Minimum Creepage Distance	Primary to secondary : 14mm	
		Secondary to secondary : 12mm	
Function	Mode select	Direct mode / Half bridge mode can be switched	
	Desaturation Protection	Yes	
	Soft Turn Off	Yes	
	Miller Clamp	None	
	Active Clamp Gate	None ※1	
	Protection Release Condition	Auto Recovery, Interval: 110 ms (TYP)	
Environment	Ambient Temperature (Operating)	−40 ～ +85℃ (Input Voltage : DC13V ～ 18V)	
		−40 ～ +75℃ (Input Voltage : DC18V ～ 28V)	
	Ambient Temperature (Storage)	20 ～ 95%RH (Nil condensation)	
	Ambient Humidity (Storage)	−40 ～ +90℃	
	Ambient Humidity (Storage)	5 ～ 95%RH (Nil condensation)	

*The content of this document is subject to change without prior notice for the purpose of improvements, etc.
※1 Active clamp function is optional. Please contact us.

Pin assignment

CN101 : RA-H201SD / JST

Pin No.	Name	Function
1	VIN(+)	Power supply for DC/DC converter(+)
2	VIN(-)	Power supply for DC/DC converter(-)
3	VIN(+)	Power supply for DC/DC converter(+)
4	VIN(-)	Power supply for DC/DC converter(-)
5	VCC	Power supply for drive circuit
6	GND	Ground for drive circuit
7	VCC	Power supply for drive circuit
8	GND	Ground for drive circuit
9	ALM1	Alarm signal output 1 (High side)
10	GND	Ground for drive circuit

Pin No.	Name	Function
11	INB	Control input B (High side)
12	GND	Ground for drive circuit
13	ALM2	Alarm signal output 2 (Low side)
14	GND	Ground for drive circuit
15	INA	Control input A (Low side)
16	GND	Ground for drive circuit
17	MOD	Mode select
18	GND	Ground for drive circuit
19	RTC	Recovery time of protection circuit control
20	GND	Ground for drive circuit

Product Lineup

Gate Driver Unit

2QG-C Series

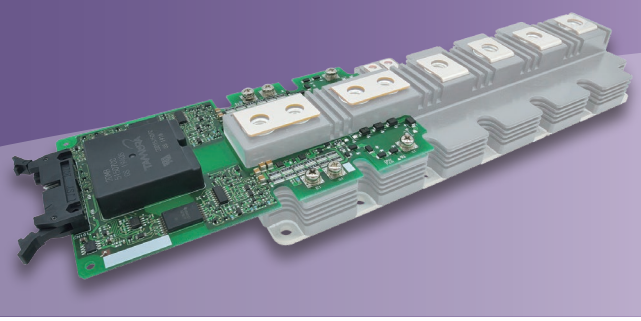

Applications

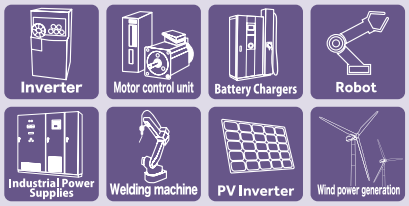

Features

1. High insulation voltage (AC5kV)
2. Low profile (14mmMax, From the board mounting position)
3. Low stray capacity (12pF TYP)
4. Wide input voltage range (DC13V-28V)
5. Soft-Turn-off

Standards

UL508 compliant

2QG-C series is suitable for PrimePACK™3+.
Built-in isolated DC / DC converter and gate drive circuit, in addition, gate resistor and short circuit detection voltage have already been set.

Note1: PrimePACK™ is a registered trademark of Infineon Technologies AG.

Application Image

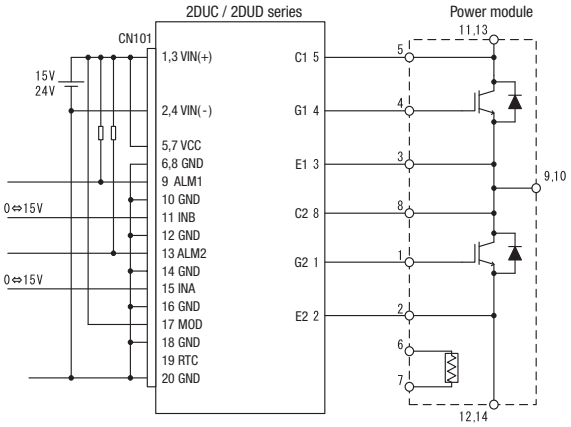

Outline Dimensional Drawing

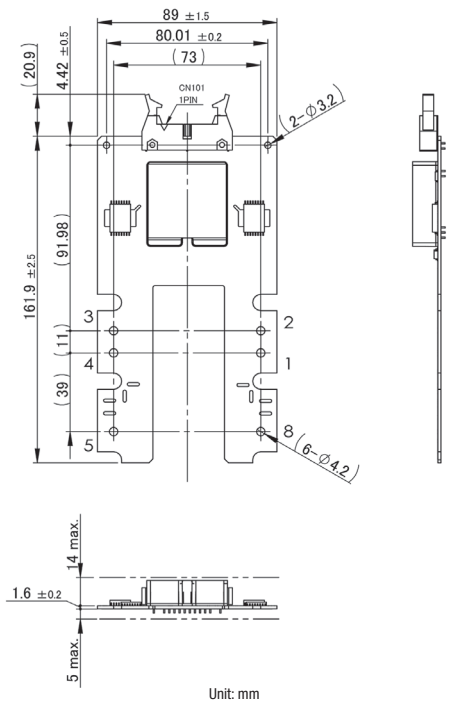

Unit: mm
Note: 1.The dimensional tolerance without directions is ± 0.5mm.

General characteristics

Model		2QG010CDC11N	2QG020CDC11N
Application		2MBI1800XXG170-50 (Fuji Electric)	FF1800R17IP5 (Infineon Technologies)
Input	Input Voltage Range	DC13V ～ 28V	
	Logic Input Voltage	DC13 ～ 18V	
Output	Number of Output	2	
	Gate Voltage (ON)	+14V ～ +16V	
	Gate Voltage(OFF)	−9V ～ −11V	
	Permissible Switching Frequency	8.8kHz (Qg=12.5uC)	8.4kHz (Qg=8.4uC)
Insulation	Withstand Voltage	Primary to secondary : AC5000V	
	Delay Time	±130ns (TYP)	
	Minimum Clearance Distance	Primary to secondary : 14mm	
		Secondary to secondary : 8mm	
	Minimum Creepage Distance	Primary to secondary : 16mm * As for Gate Driver PCB	
		Secondary to secondary : 12mm	
Function	Mode select	Direct mode / Half bridge mode can be switched	
	Desaturation Protection	Yes	
	Soft Turn Off	Yes	
	Miller Clamp	None	
	Active Clamp Gate	None ※1	
	Protection Release Condition	Auto Recovery, Interval: 110 ms (TYP)	
Environment	Ambient Temperature (Operating)	−40 ～ +85℃ (Input Voltage: DC13V ～ 18V)	
		−40 ～ +75℃ (Input Voltage: DC18V ～ 28V)	
	Ambient Temperature (Storage)	20 ～ 95%RH (Nil condensation)	
	Ambient Humidity (Operating)	−40 ～ +90℃	
	Ambient Humidity (Storage)	5 ～ 95%RH (Nil condensation)	

※1 Active clamp function is optional. Please contact us.

Pin assignment

CN101 : RA-H201SD / JST

Pin No.	Name	Function
1	VIN(+)	Power supply for DC/DC converter(+)
2	VIN(-)	Power supply for DC/DC converter(-)
3	VIN(+)	Power supply for DC/DC converter(+)
4	VIN(-)	Power supply for DC/DC converter(-)
5	VCC	Power supply for drive circuit
6	GND	Ground for drive circuit
7	VCC	Power supply for drive circuit
8	GND	Ground for drive circuit
9	ALM1	Alarm signal output 1 (High side)
10	GND	Ground for drive circuit

Pin No.	Name	Function
11	INB	Control input B (High side)
12	GND	Ground for drive circuit
13	ALM2	Alarm signal output 2 (Low side)
14	GND	Ground for drive circuit
15	INA	Control input A (Low side)
16	GND	Ground for drive circuit
17	MOD	Mode select
18	GND	Ground for drive circuit
19	RTC	Recovery time of protection circuit control
20	GND	Ground for drive circuit

Product Lineup

Gate Driver Unit

4DUx Series

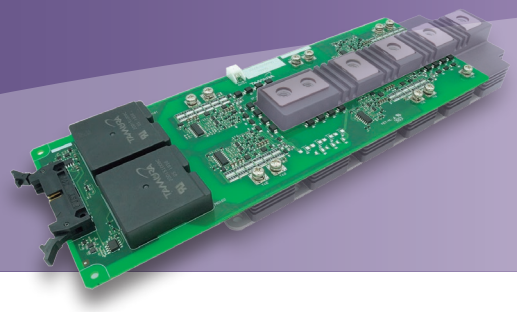

Applications

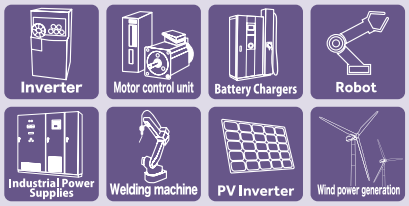

Features

1. High insulation voltage (AC5kV)
2. Low profile
   (14mmMax, From the board mounting position)
3. Low stray capacity (12pF TYP)
4. Wide input voltage range
   (DC13V-28V)

Standards

UL508 compliant

It is an optimum gate driver for 3-Level circuit IGBT (4in1).
We prepared two models for T-TYPE and I-TYPE
with a low profile of almost the same height as the T-Prime terminals.

Application Image

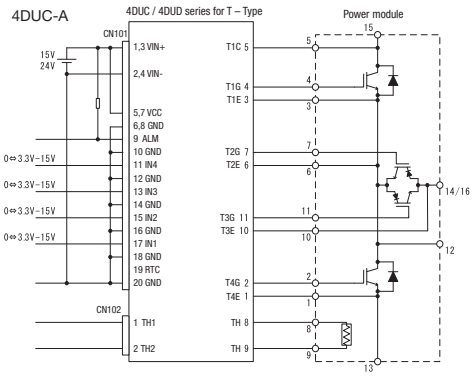

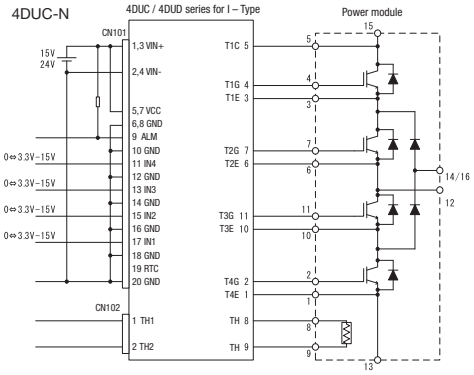

Outline Dimensional Drawing

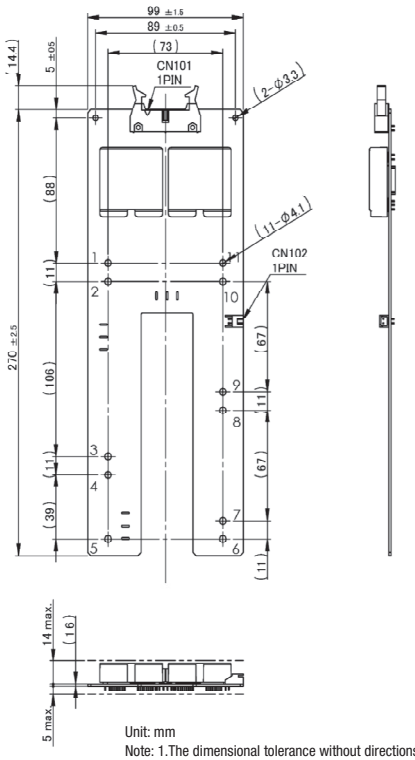

Unit: mm
Note: 1.The dimensional tolerance without directions is ± 0.5mm.

General characteristics

Model		4DUD-N series	4DUC-A series	
		4DUD51016CFN1	4DUC51016CFA1	4DUC51016CFA2
Application		4MBI600VC-120-50 (Fuji Electric)	4MBI900VB-120R1-50 (Fuji Electric)	4MBI900VB-120R1-50 (Fuji Electric)
Input	Input Voltage Range	DC13V ~ 28V		
	Logic Input Voltage	DC3.3 ~ 5V		
Output	Number of Output	4		
	Gate Voltage (ON)	+14V ~ +16V		
	Gate Voltage (OFF)	−9V ~ −11V		
	Maximum Gate Charge	5700nC	T1,T4 : 8500nC, T2,T3 : 4300nC	T1,T4 : 8500nC T2,T3 : 3900nC
	Maximum Switching Frequency	7.5kHz (Ave), 15kHz (Peak)		
Insulation	Withstand Voltage	Primary to secondary : AC5000V		
	Delay Time	±130ns (TYP)		
	Minimum Clearance Distance	Primary to secondary : 14mm		
	Minimum Creepage Distance	Primary to secondary : 14mm		
Function	Desaturation Protection	T1,T4 : Yes, T2,T3 : None		
	Soft Turn Off	Yes		
	Miller Clamp	None	None	None
	Active Clamp	Yes	None	None
	Protection Release Condition	Auto Recovery, Interval: 110 ms (TYP)		
Environment	Ambient Temperature (Operating)	−40 ~ +85°C (Input Voltage: DC13V ~ 18V)		
		−40 ~ +75°C (Input Voltage: DC18V ~ 28V)		
	Ambient Humidity (Operating)	20 ~ 95%RH (Nil condensation)		
	Ambient Temperature (Storage)	−40 ~ +90°C		
	Ambient Humidity (Storage)	5 ~ 95%RH (Nil condensation)		

*The content of this document is subject to change without prior notice for the purpose of improvements, etc.

Pin assignment

CN101 : RA-H201SD / JST

Pin No.	Name	Function
1	VIN+	Power supply for DC/DC converter(+)
2	VIN-	Power supply for DC/DC converter(-)
3	VIN+	Power supply for DC/DC converter(+)
4	VIN-	Power supply for DC/DC converter(-)
5	VCC	Power supply for drive circuit
6	GND	Ground for drive circuit
7	VCC	Power supply for drive circuit
8	GND	Ground for drive circuit
9	ALM	Alarm signal output
10	GND	Ground for drive circuit
11	IN4	Control input 4
12	GND	Ground for drive circuit
13	IN3	Control input 3
14	GND	Ground for drive circuit
15	IN2	Control input 2
16	GND	Ground for drive circuit
17	IN1	Control input 1
18	GND	Ground for drive circuit
19	RTC	Recovery time of protection circuit control
20	GND	Ground for drive circuit

CN102 : S2B-XH-A /JST

Pin No.	Name	Function
1	TH	For thermistor
2	TH	For thermistor

Product Lineup

Gate Driver Unit

2EG-B Series

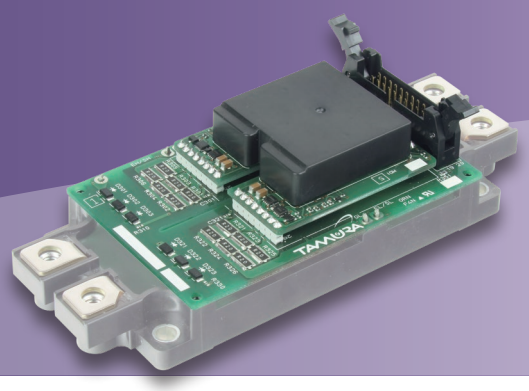

Applications

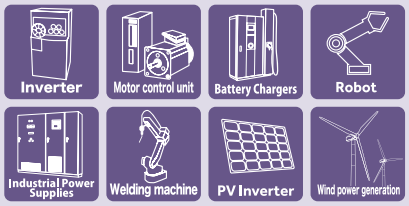

Features

1. High insulation voltage (AC5kV)
2. Low profile (20mmMax, From the board mounting position)
3. Low stray capacity (12pF TYP)
4. Wide input voltage range (DC13V-28V)
5. Soft-turn-off/Miller-Clamp

Standards

UL508 compliant

2EG-B series is suitable for SiC power module. (support to 1700V module)
Built-in isolated DC / DC converter and gate drive circuit and short circuit detection voltage have already been set.
Gate resistance is not assembled.
They must be assembled by the user before operation.

Application Image | T.B.D

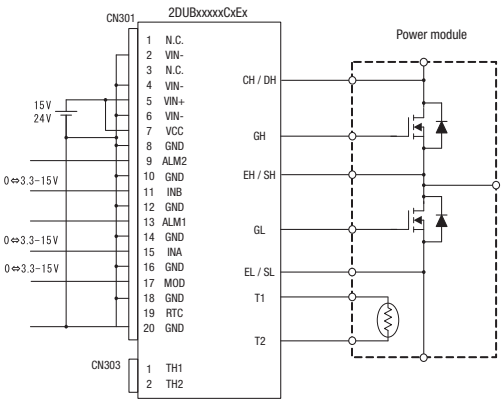

Outline Dimensional Drawing | T.B.D

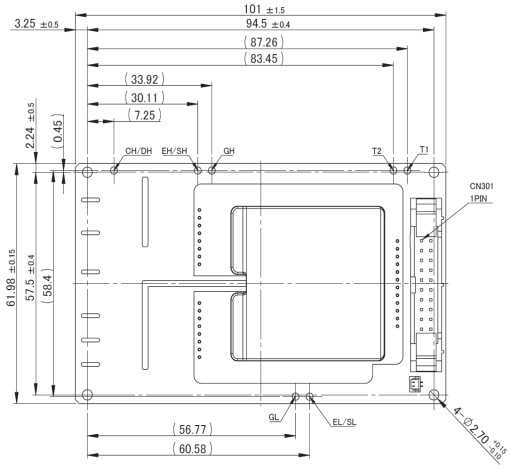

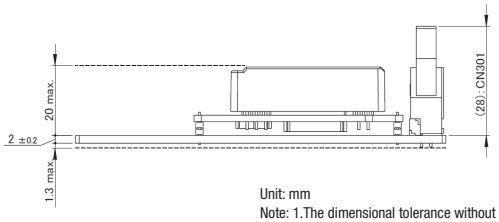

Unit: mm
Note: 1.The dimensional tolerance without directions is ± 0.5mm.

Specifications are subject to change without notice.

General characteristics

Model		2EG01XBCN13N	2EG01XBDN13N	2EG01XBCN14N	2EG01XBDN14N
Application		SiC MOSFET			
Input	Input Voltage Range	DC13V ~ 28V			
	Logic Input Voltage	DC3.3 ~ 18V	DC13 ~ 18V	DC3.3 ~ 18V	DC13 ~ 18V
Output	Number of Output	2			
	Gate Voltage (ON)	+17V ~ +19V			
	Gate Voltage (OFF)	−5V ~ −3V		−3V ~ −1V	
	Maximum Switching Frequency	200kHz			
Insulation	Withstand Voltage	Primary to secondary : AC5000V			
	Delay Time	±130ns (TYP)			
	Minimum Clearance Distance	T.B.D			
	Minimum Creepage Distance	T.B.D			
Function	Mode select	Direct mode / Half bridge mode can be switched			
	Desaturation Protection	Yes			
	Soft Turn Off	Yes			
	Miller Clamp	Yes			
	Active Clamp	None			
	Protection Release Condition	Auto Recovery, Interval: 110 ms (TYP)			
	Gate resistor	No mounting / Lead resistor can be mounted.			
Environment	Ambient Temperature (Operating)	−40 ~ +85℃ (Input Voltage : DC13V ~ 18V)			
		−40 ~ +75℃ (Input Voltage : DC18V ~ 28V)			
	Ambient Humidity (Operating)	20 ~ 95%RH (No condensation)			
	Ambient Temperature (Storage)	−40 ~ +90℃			
	Ambient Humidity (Storage)	5 ~ 95%RH (No condensation)			

*The content of this document is subject to change without prior notice for the purpose of improvements, etc.

Pin assignment T.B.D

CN101 : RA-H201TD / JST

Pin No.	Name	Function
1	N.C	Unused pin
2	VIN-	Power supply for DC/DC converter(-)
3	N.C	Unused pin
4	VIN-	Power supply for DC/DC converter(-)
5	VIN+	Power supply for drive circuit
6	VIN-	Power supply for DC/DC converter(-)
7	VCC	Power supply for drive circuit
8	GND	Ground for drive circuit
9	ALM2	Alarm signal output 2 (High side)
10	GND	Ground for drive circuit

Pin No.	Name	Function
11	INB	Control input B (High side)
12	GND	Ground for drive circuit
13	ALM1	Alarm signal output 1 (Low side)
14	GND	Ground for drive circuit
15	INA	Control input A (Low side)
16	GND	Ground for drive circuit
17	MOD	Mode select
18	GND	Ground for drive circuit
19	RTC	Recovery time of protection circuit control
20	GND	Ground for drive circuit

Product Lineup

DC-DC Converter for gate drive

2DD series

Applications

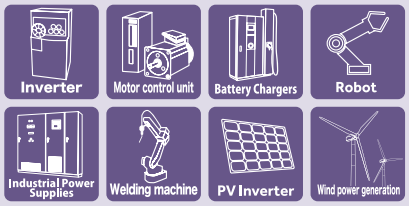

Features

1. High insulation voltage (AC5kV)
2. Low stray capacity (9pF TYP)
3. Low profile (12.5mm)
4. Dual output corresponding to 2 in 1
5. Wide input voltage range (DC13V-28V)

Standards

UL508 (file no.E243511)

The 2DD series is a dedicated DC-DC Converter for driving various SiC and IGBT power modules.
The low parasitic capacitance (9pF) and Insulation voltage (5kV) make this product ideal for driving IGBT and SiC.

Application Image

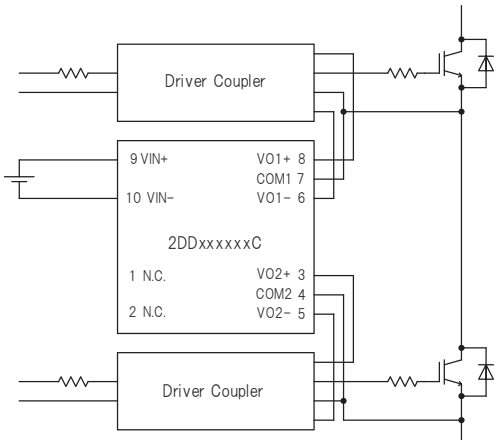

Outline Dimensional Drawing

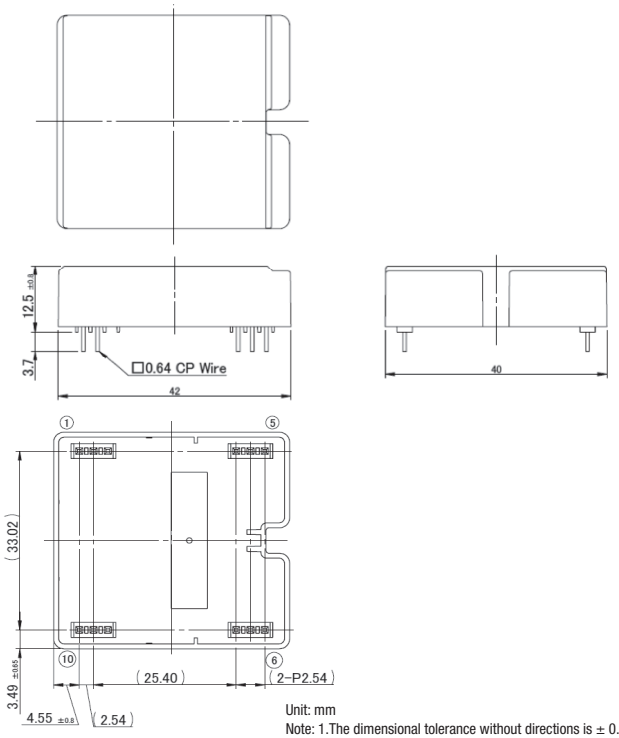

Unit: mm
Note: 1.The dimensional tolerance without directions is ± 0.5mm.

General characteristics

Model		2DD151507C	2DD151008C	2DD180407C	2DD180206C
Input Voltage Range		DC13V ~ 28V			
Number of Output		2			
Output Voltage (High) Vo1+,Vo2+		+14V ~ +16V	+14V ~ +16V	+17V ~ +19V	+17V ~ +19V
Output Voltage (Low) Vo1-,Vo2-		–14V ~ –16V	–9V ~ –11V	–3V ~ –5V	–1V ~ –3V
Rated Load (per 1ch)		0.11A	0.16A	0.16A	0.16A
Efficiency (DC24V, Rated load, Ta=25℃)		79.5% (typ)	79.5% (typ)	79.0% (typ)	78.5% (typ)
Line Regulation (Rated load, Ta=25℃)		50mV (typ)	50mV (typ)	50mV (typ)	50mV (typ)
Load Regulation (DC24V, 10mA ~ Rated load, Ta=25℃)		200mV (typ)	200mV (typ)	200mV (typ)	200mV (typ)
Ripple		250mVpp	150mVpp	150mVpp	150mVpp
Ripple & Noise		300mVpp	200mVpp	200mVpp	200mVpp
Protection	Over Current Protection	Auto recovery			
	Over Temperature Protection	Auto recovery			
Insulation	Withstand voltage	Primary to secondary : AC5000V			
		Secondary to secondary : AC4000V			
	Insulation Resistance	DC500V 100MΩmin			
	Isolation Capacitance	9pF (typ)			
Environment	Ambient Temperature (Operating)	–40 ~ +85℃ (Input Voltage : DC13V ~ 18V)			
		–40 ~ +75℃ (Input Voltage : DC13V ~ 28V)			
	Ambient Humidity (Operating)	20 ~ 95%RH (No condensation)			
	Ambient Temperature (Storage)	–40 ~ +90℃			
	Ambient Humidity (Storage)	5 ~ 95%RH (No condensation)			
	Vibration	10 ~ 55HZ 1.5mmp-p 120min X,Y,Z direction each once			
	Shock	490m/s² 11ms X,Y,Z direction each once			

*The content of this document is subject to change without prior notice for the purpose of improvements, etc.ection ea

Pin assignment

Pin No.	Name
1	N.C.
2	N.C.
3	VO2+
4	COM2
5	VO2-
6	VO1-
7	COM1
8	VO1+
9	VIN+
10	VIN-

Product Lineup

Gate Driver Module

2DM Series

EOL Products.

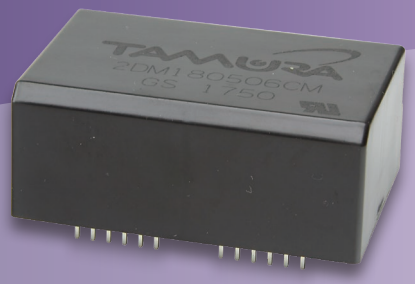

Applications

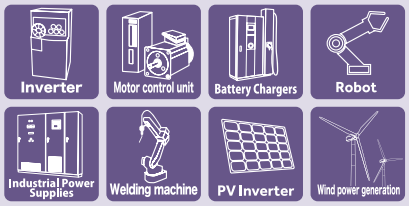

Features

1. Low common mode noise (parasitic capacitance: 15pF TYP)
2. Fast response (100ns TYP)
3. All-in-one (built-in DC-DC converter/ Gate driver)
4. It corresponds to a module of 2in1 type. 2 drive circuits are separate respectively.
5. Dielectric withstand voltage: AC2500Vrms
6. Electrolytic capacitor-less

Standards

UL508 (file no.E243511)

* 2CG-B and 2CG-D series are recommended.

General characteristics

Model		2DM180506CM	2DM180206CM	2DM150806CM	2DM150606CM
Input	Supply voltage range	DC 13V ～ DC 28V / DC 24V			
	Input signal voltage	DC 5V			
Output	Number of drive circuits	2			
	Maximum output power	3W (per circuit)			
	Output terminal voltage (H)	+17V ～ +19V	+17V ～ +19V	+14V ～ +16V	+14V ～ +16V
	Output terminal voltage (L)	–4V ～ –6V	–1V ～ –3V	–7V ～ –9V	–5V ～ –7V
	Switching frequency	200kHz max			
	Gate drive capability	2400nC ／ 50kHz	2800nC ／ 50kHz	2400nC ／ 50kHz	2600nC ／ 50kHz
		600nC ／ 200kHz	700nC ／ 200kHz	600nC ／ 200kHz	650nC ／ 200kHz
		(When the output power per circuit is equivalent to 3W)			
	Maximum output current	18A peak (guaranteed by design)			
Delay time		100nsec. (typ.)			
Mirror clamp detection		Operation with Output terminal voltage +2Vtyp. ; –3A peak (guaranteed by design)			
Desaturation protection function		Fault signal output function; Recovery by turning on the reset input again.			
Signal transmission method (isolation circuit)		Magnetic Isolator			
Dielectric withstand voltage		AC2500V/ 1min. Note: Between primary and secondary; Between drive circuits			
Operating temperature range		–40℃ to +85℃; Maximum output power at 85℃ : Approximately 0.75W (per circuit) Note: Temperature derating may occur depending on the drive conditions.			
Operating humidity range		20% to 95% RH (No condensation)			

Product Lineup

Gate Driver Unit

2DU Series

EOL Products.

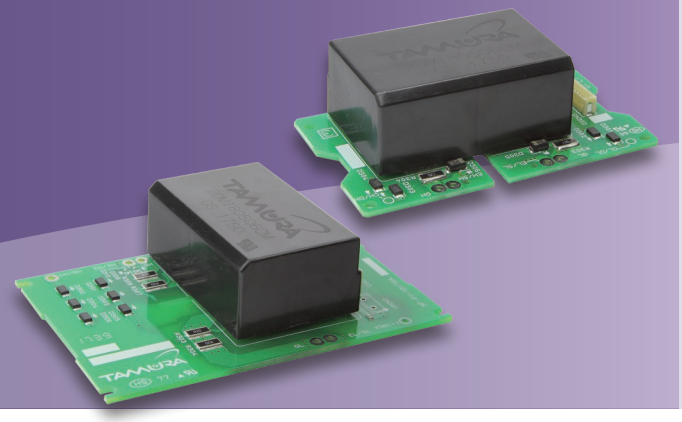

Applications

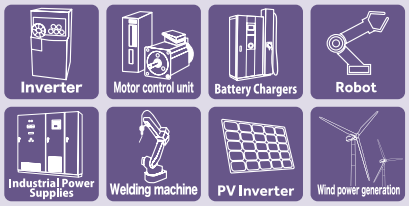

Features

1. Easy product directly attachable to ROHM SiC power module
2. Low common mode noise (parasitic capacitance: 15pF TYP)
3. Fast response (100ns TYP)
4. Dielectric withstand voltage: AC2500Vrms
5. Electrolytic capacitor-less

Standards

UL508 compliant

* 2EG-B series are recommended.

General characteristics

Model		2DU180506MR01	2DU180506MR02	2DU180506MR03	2DU180506MR04	2DU180206MR01	2DU180206MR02	2DU180206MR04
Application		BSM120D12P2C005	BSM300D12P2E001 BSM400D12P2G003	BSM080D12P2C008	BSM180D12P2E002	BSM180D12P3C007	BSM300D12P3E005 BSM400D12P3G002	BSM600D12P3G001
Input	Input Voltage Range	DC13V ～ 28V						
	Logic Input Voltage	DC5V						
Output	Number of Output	2						
	Gate Voltage (ON)	+17V ～ +19V						
	Gate Voltage (OFF)	–6V ～ –4V				–3V ～ –1V		
	Maximum Gate Charge	690nC	1910nC 2300nC	390nC	1050nC	600nC	760nC 1100nC	1500nC
	Maximum Switching Frequency (Ta=55˚C)	90kHz	60kHz 50kHz	200kHz	100kHz	100kHz	160kHz 120kHz	90kHz
	Maximum Switching Frequency (Ta=85˚C)	30kHz	15kHz 12kHz	50kHz	25kHz	35kHz	40kHz 30kHz	20kHz
Insulation	Withstand Voltage	Primary to secondary : AC2500V						
	Delay Time	±100ns (TYP)						
	Minimum Clearance Distance	Primary to secondary : 6mm Secondary to secondary : 6mm						
	Minimum Creepage Distance	Primary to secondary : 6mm Secondary to secondary : 6mm						
Function	Mode select	None						
	Desaturation Protection	Yes						
	Soft Turn Off	None						
	Miller Clamp	Yes						
	Active Clamp	None						
	Protection Release Condition	Restore by inputting again (Reset input pin)						
Environment	Ambient Temperature (Operating)	–40˚C to +85˚C (See above for corresponding maximum switching frequency)						
	Ambient Humidity (Operating)	20 ～ 95%RH (No condensation)						
	Ambient Temperature (Storage)	–40 ～ +100˚C						
	Ambient Humidity (Storage)	5 ～ 95%RH (No condensation)						

*The content of this document is subject to change without prior notice for the purpose of improvements, etc.

Product Cross reference

※1 There are other applicable power modules, Search in the selection guide.

Product line-up for FUJI Electric "DualXT Type"

Ic	Part No ※1	Gate Driver Unit	Gate Driver Module	DC-DC Power Supply
		Vce=1200V		
225	2MBI225XNA120-50	2EG01XCCN11N 2EG01XCDN11N	2CG010BBC11N 2CG010BBC12N 2CG010DBC11N 2CG010DBC12N	2DD151507C / 2DD151008C
300	2MBI300XNA120-50			
450	2MBI450XNA120-50			
600	2MBI600XNG120-50			
600	2MBI600XNE120-50			
800	2MBI800XNE120-50			
1000	2MBI1000XRNE120-50			
		Vce=1700V		
225	2MBI225XNA170-50	2EG01XCCN11N 2EG01XCDN11N	2CG010BBC11N 2CG010BBC12N 2CG010DBC11N 2CG010DBC12N	2DD151507C / 2DD151008C
300	2MBI300XNA170-50			
450	2MBI450XNA170-50			
600	2MBI600XNE170-50			
600	2MBI600XNG170-50			
800	2MBI800XRNE170-50			

Product line-up for FUJI Electric "Standard2 Type"

Ic	Part No ※1	Gate Driver Unit	Gate Driver Module	DC-DC Power Supply
		Vce=1200V		
100	2MBI100XAA120-50		2CG010BBC11N 2CG010BBC12N 2CG010DBC11N 2CG010DBC12N	2DD151507C / 2DD151008C
150	2MBI150XAA120-50			
200	2MBI200XAA120-50			
200	2MBI200XBE120-50			
300	2MBI300XBE120-50			
300	2MBI300XHA120-50			
400	2MBI400XDE120-50			
450	2MBI450XHA120-50			
450	2MBI450XEE120-50			
600	2MBI600XDE120-50			
600	2MBI600XHA120-50			
600	2MBI600XEE120-50			
		Vce=1700V		
75	2MBI75XAA170-50		2CG010BBC11N 2CG010BBC12N 2CG010DBC11N 2CG010DBC12N	2DD151507C / 2DD151008C
100	2MBI100XAA170-50			
150	2MBI150XAA170-50			
150	2MBI150XHA170-50			
200	2MBI200XHA170-50			
300	2MBI300XHA170-50			
300	2MBI300XEE170-50			
400	2MBI400XHA170-50			
400	2MBI400XEE170-50			

Product line-up for FUJI Electric "PrimePACK™ Type"

Ic	Part No ※1	Gate Driver Unit	Gate Driver Module	DC-DC Power Supply
		Vce=1200V		
900	2MBI900XXA120P-50	Semi-optimized products. Please contact us.	2CG010BBC11N 2CG010BBC12N 2CG010DBC11N 2CG010DBC12N	2DD151507C / 2DD151008C
	2MBI900XXA120E-50			
1200	2MBI1200XXE120P-50			
	2MBI1200XXE120E-50			
1400	2MBI1400XXB120P-50			
1800	2MBI1800XXF120P-50			
2400	2MBI2400XRXG120-50			
		Vce=1700V		
650	2MBI650XXA170-50	Semi-optimized products. Please contact us.	2CG010BBC11N 2CG010BBC12N 2CG010DBC11N 2CG010DBC12N	2DD151507C / 2DD151008C
1200	2MBI1200XXE170-50			
1000	2MBI1000XXB170-50			
1400	2MBI1400XXB170-50			
1800	2MBI1800XXF170-50	2PG010CCC11N 2PG010CDC11N		
1800	2MBI1800XXG170-50	2QG010CDC11N		

Product Cross reference

※1 There are other applicable power modules, Search in the selection guide.

Product line-up for FUJI Electric "PrimePACK™ 3-Level Type"

Ic	Ic (T2,T3)	Part No	Gate Driver Unit	Gate Driver Module	DC-DC Power Supply
Vce=1200V (T1,T4)					
900	450	4MBI450VB-120R1-50	Under planning		2DD151507C / 2DD151008C
900	650	4MBI650VB-120R1-50			
900	900	4MBI900VB-120R1-50	4DUC51016CFA1		
900	900	4MBI900VB-120RA-50	4DUC51016CFA2		
1200	600	4MBI600VC-120-50	4DUD51016CFN1		
Vce=1700V (T1,T4)					
1200	450	4MBI450VB-170R2-50	Under planning		2DD151507C / 2DD151008C
1200	600	4MBI600VB-170R2-50			

Note1: PrimePACK™ is registered trademark of Infineon Technologies AG, Germany.

Product line-up for Mitsubishi Electric "NX Type"

Ic	Part No ※1	Gate Driver Unit	Gate Driver Module	DC-DC Power Supply
Vce=1200V				
225	CM225DX-24T1	2EG01XCCN11N 2EG01XCDN11N	2CG010BBC11N 2CG010BBC12N 2CG010DBC11N 2CG010DBC12N	2DD151507C / 2DD151008C
225	CM225DX-24T			
300	CM300DX-24T1			
300	CM300DX-24T			
450	CM450DX-24T1			
450	CM450DX-24T			
600	CM600DX-24T1			
600	CM600DX-24T			
800	CM800DX-24T1			
Vce=1700V				
225	CM225DX-34T	2EG01XCCN11N 2EG01XCDN11N	2CG010BBC11N 2CG010BBC12N 2CG010DBC11N 2CG010DBC12N	2DD151507C / 2DD151008C
300	CM300DX-34T			
450	CM450DX-34T			
600	CM600DX-34T			

Product line-up for Mitsubishi Electric "Std Type"

Ic	Part No ※1	Gate Driver Unit	Gate Driver Module	DC-DC Power Supply
Vce=1200V				
300	CM300DY-24T		2CG010BBC11N 2CG010BBC12N 2CG010DBC11N 2CG010DBC12N	2DD151507C / 2DD151008C
450	CM450DY-24T			
600	CM600DY-24T			
Vce=1700V				
300	CM300DY-34T		2CG010BBC11N 2CG010BBC12N 2CG010DBC11N 2CG010DBC12N	2DD151507C / 2DD151008C
400	CM400DY-34T			

Product line-up for Mitsubishi Electric "LV100 (Industrial) Type"

Ic	Part No	Gate Driver Unit		Gate Driver Module	DC-DC Power Supply
		Leader	Follower		
Vce=1200V					
800	CM800DW-24T	2LG02ACCC11M 2LG02ACDC11M	2LG02ACZC11S	2CG010BBC11N 2CG010BBC12N 2CG010DBC11N 2CG010DBC12N	2DD151507C /2DD151008C
1200	CM1200DW-24T				
Vce=1700V					
800	CM800DW-34T CM800DW-34TA	2LG01ACCC11M 2LG01ACDC11M	2LG01ACZC11S	2CG010BBC11N 2CG010BBC12N 2CG010DBC11N 2CG010DBC12N	2DD151507C /2DD151008C
1200	CM1200DW-34T				
Vce=2000V					
2000	CM1200DW-40T	2LG07ACDC11M	2LG07ACZC11SP	2CG010BBC11N 2CG010BBC12N 2CG010DBC11N 2CG010DBC12N	2DD151507C /2DD151008C

Product Cross reference

※1 There are other applicable power modules, Search in the selection guide.

Product line-up for Infineon Technologies "EconoDUAL™ Type"

Ic	Part No ※1	Gate Driver Unit	Gate Driver Module	DC-DC Power Supply
		Vce=1200V		
150	FF150R12MS4G	2EG01XCCN11N 2EG01XCDN11N	2CG010BBC11N 2CG010BBC12N 2CG010DBC11N 2CG010DBC12N	2DD151507C / 2DD151008C
225	FF225R12ME4			
225	FF225R12MS4			
300	FF300R12ME4			
300	FF300R12MS4			
450	FF450R12ME4			
600	FF600R12ME4			
700	FF750R12ME7			
900	FF900R12ME7			
		Vce=1700V		
225	FF225R17ME4	2EG01XCCN11N 2EG01XCDN11N	2CG010BBC11N 2CG010BBC12N 2CG010DBC11N 2CG010DBC12N	2DD151507C / 2DD151008C
300	FF300R17ME4			
450	FF450R17ME4			
600	FF600R17ME4			
750	FF750R17ME7			
900	FF900R17ME7			

Product line-up for Infineon Technologies "PrimePACK™ Type"

Ic	Part No ※1	Gate Driver Unit	Gate Driver Module	DC-DC Power Supply
		Vce=1200V		
900	FF900R12IE4	Semi-optimized products. Please contact us.	2CG010BBC11N 2CG010BBC12N 2CG010DBC11N 2CG010DBC12N	2DD151507C / 2DD151008C
1200	FF1200R12IE5			
1400	FF1400R12IP4			
		Vce=1700V		
650	FF650R17IE4	Semi-optimized products. Please contact us.	2CG010BBC11N 2CG010BBC12N 2CG010DBC11N 2CG010DBC12N	2DD151507C / 2DD151008C
1200	FF1200R17IP5			
1000	FF1000R17IE4			
1400	FF1400R17IP4			

Note1: EconoDUAL™ is registered trademark of Infineon Technologies AG, Germany. Note2: PrimePACK™ is registered trademark of Infineon Technologies AG, Germany.

Product line-up for Infineon Technologies "PrimePACK™ 3+ Type"

Ic	Part No ※1	Gate Driver Unit	Gate Driver Module	DC-DC Power Supply
		Vce=1200V		
900	FR900R12IE4D	Semi-optimized products. Please contact us.	2CG010BBC11N 2CG010BBC12N 2CG010DBC11N 2CG010DBC12N	2DD151507C / 2DD151008C
1500	FF1500R12IE5			
1800	FF1800R12IE5			
		Vce=1700V		
1500	FF1500R17IP5	Semi-optimized products. Please contact us.	2CG010BBC11N 2CG010BBC12N 2CG010DBC11N 2CG010DBC12N	2DD151507C / 2DD151008C
1800	FF1800R17IP5	2QG020CDC11N		

Product line-up for ROHM Semiconductor "SiC C Type"

Ic	Part No	Gate Driver Unit	Gate Driver Module	DC-DC Power Supply
		Vce=1200V		
80	BSM080D12P2C008		2CG010BBC13N	2DD180407C
120	BSM120D12P2C005			
180	BSM180D12P3C007		2CG010BBC14N	2DD180206C

Product line-up for ROHM Semiconductor "SiC E Type"

Ic	Part No	Gate Driver Unit	Gate Driver Module	DC-DC Power Supply
		Vce=1200V		
180	BSM180D12P2E002	2EG01XBCN13N 2EG01XBDN13N	2CG010BBC13N	2DD180407C
300	BSM300D12P2E001			
300	BSM300D12P3E005	2EG01XBCN14N 2EG01XBDN14N	2CG010BBC14N	2DD180206C
		Vce=1700V		
250	BSM250D17P2E004	2EG01XBCN13N 2EG01XBDN13N	2CG010BBC13N	2DD180407C

Product line-up for ROHM Semiconductor "SiC G Type"

Ic	Part No	Gate Driver Unit	Gate Driver Module	DC-DC Power Supply
		Vce=1200V		
400	BSM400D12P2G003	2EG01XBCN13N 2EG01XBDN13N	2CG010BBC13N	2DD180407C
400	BSM400D12P3G002	2EG01XBCN14N 2EG01XBDN14N	2CG010BBC14N	2DD180206C
600	BSM600D12P3G001			

Part numbering system

You can refer to gate driver's web selection guide from this code

* For system description. Not all combinations are possible.

2 L G 01 A D D C 1 1 M – 01

*Not all combinations are possible.

Customer code	*Secret
packing	Notingh: Collective packing P: Individual packaging
Mastet Slave	N: Nomal, M: Leader (Possible parallel), S: Follower
Output voltage	1: +15V/–10V, 2: +15V/–15V, 3: +18V/–4V, 4: +18V/–2V
DCDC type	1: 4W/ 2 output type, 2: 0: Not equipped
Coating	C: Yes, N: No
Input signal	B: 3.3-5V, C: 3.3-15V, D: 15V, V: Optical communication, Z: Slave
Protection function	A: UVLO, B: UVLO+ Soft turn off + Miller clamp, C: UVLO + Soft turn off, D: UVLO + Soft turn off + Active clamp
Extra function	0: Nothing, A: Sub PCB equipped
Support number	Identification of Gate resistors, DESAT capacitors, etc. (00: No gate resistance)
Category	G: Gate driver
Device package	E: EconoDual™ / P: PrimePACK™ / Q: PrimePACK™3+ / L: LV100 XHP™2 A: T-Type(A-NPC) / N: I-Type(NPC) / C: Driver core / S: 62mm standard
Output number	

XHP™2 is registered trademark of Infineon Technologies AG, Germany.
PrimePACK™ is registered trademark of Infineon Technologies AG, Germany.
EconoDUAL™ is registered trademark of Infineon Technologies AG, Germany.